MECKLENBURG COUNTY

Code Enforcement

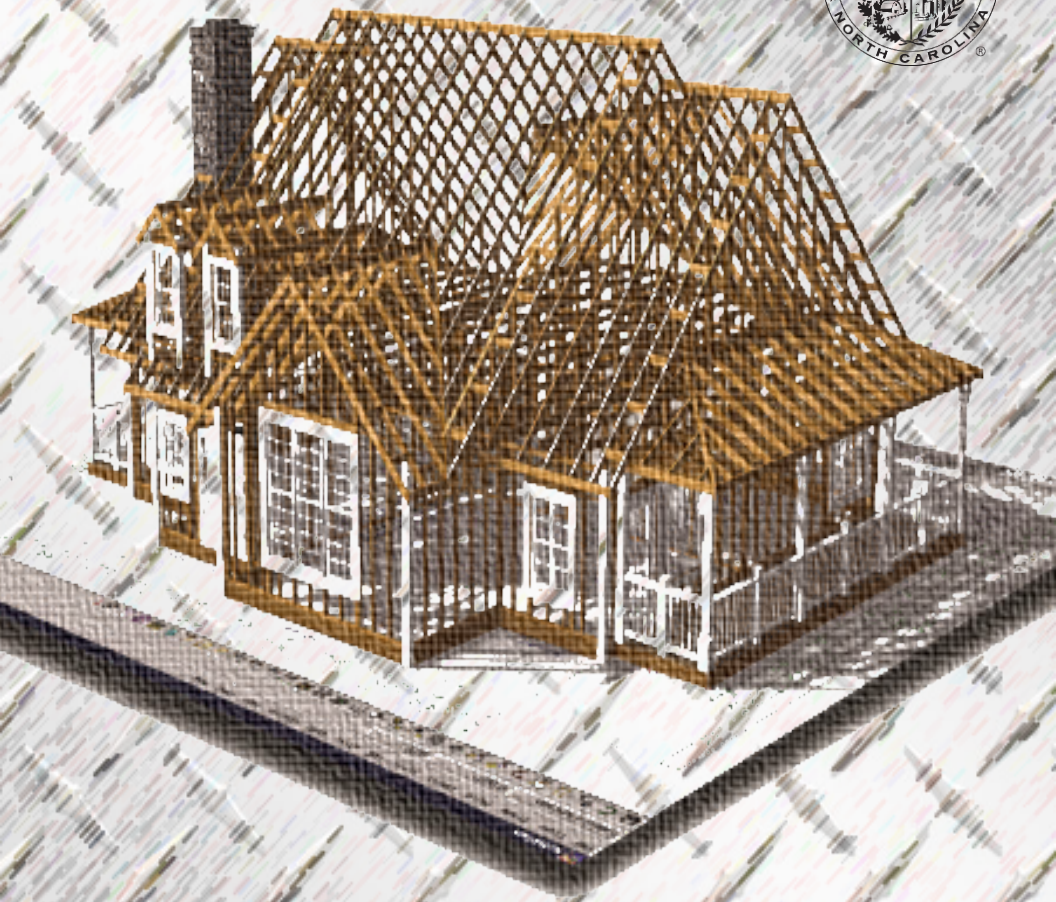

RESIDENTIAL CONSTRUCTION HANDBOOK 2012

REVISED 05/2017

PREFACE

This booklet was published to assist customers with some of the most commonly asked questions about the North Carolina Residential Code. The current edition of the North Carolina Residential Code became effective on March 1, 2012. This handbook is to be used as only a guide and is not intended to be a substitute for the current North Carolina Residential Building Code. Great care has been taken within this booklet to provide the newest version of the code including any amendments made to the current code. If a conflict is found between these two publications, the current North Carolina Residential Code will prevail. Code references from the 2012 North Carolina Residential Building Code **(NCRC)** and the 2012 North Carolina Administrative Code and Policies **(NCACP)** are listed for referral to the code. Underlined text represents code language added by North Carolina to the International Residential which was used as the base code. Should you need additional information regarding a code interpretation you can refer to the North Carolina Department of Insurance (NCDOI) website.

http://www.ncdoi.com/OSFM/Engineering_and_Codes/Default.aspx?field1=Code_Interpretations&user=State_Building_Codes

TABLE OF CONTENTS

PHONE NUMBERS..... P. 4

PERMITS..... P. 6

INSPECTIONS..... P. 8

BUILDING PLANNING..... P. 13

PLUMBING FIXTURE CLEARENCE..... P. 16

SMOKE AND CARBON MONOXIDE ALARMS..... P. 17-18

FOOTINGS..... P. 19

FOUNDATIONS..... P. 24-25

SLABS..... P. 26-27

FOUNDATION BOLTS AND STRAPS..... P. 28-29

FRAMING..... P. 30

NOTCHING AND BORING..... P. 33-38

STUD SPACING..... P. 42

FASTNER SCHEDULE.....,,, P. 43-51

GIRDER, HEADER SPANS..... P. 52-59

FLOOR JOIST SPANS..... P. 60-61

CANTILEVER..... P. 62-63

CEILING SPANS..... P. 64-65

RAFTER SPANS..... P. 66-69

ROOF BRACING..... P. 70

STAIRWAYS..... P. 71

HANDRAIL AND GUARDRAILS..... P. 71,99

FIRESTOPPING..... P. 72-76

SAFETY GLAZING..... P. 77-82

INSULATION..... P. 83

FINAL INSPECTION REQUIREMENTS..... P. 84-87

EXTERIOR DECK CODE..... P. 88-99

SWIMMING POOLS, SPAS, HOT TUBS..... P. 100-103

REQUIREMENTS FOR SALES CENTER IN A RESIDENCE..... P. 104-105

PLAN REVIEW FOR CHILD CARE IN A RESIDENCE..... P. 106-109

Mecklenburg County Code Enforcement
2145 Suttle Avenue
Charlotte, NC 28208-5237
980-314-CODE (2633)

CUSTOMER SERVICE:..... 980-314-2633... EXT 0
PERMITTING:.....980-314-2633... EXT 23
DOCUMENT / INSPECTIONS:.....980-314-2633... EXT 22
RTAC:.....980-314-2633... EXT 2123
CTAC:.....980-314-2633... EXT 2113
REVENUE COLLECTIONS:.....980-314-2633... EXT 3
FAX:.....866-851-3630
CONTROLLERS...RESIDENTIAL.....980-314-2633... EXT 2121
COMMERCIAL...980-314-2633.....EXT 2111
INSPECTIONS BY APPOINTMENT &
OVERTIME INSPECTIONS.....704-200-4940
ZONING: .....Charlotte: 704-336-7600
.....Cornelius: 704-896-2461
.....Davidson: 704-892-7591
.....Huntersville: 704-875-7000
.....Mint Hill: 704-545-9726
.....Matthews: 704-507-3380
.....Pineville: 704-507-3380
.....COUNTY NORTH: 980-721-0924
.....COUNTY SOUTH: 704-432-0709
MINIMUM HOUSING INSPECTOR COUNTY:
DAVIDSON CORNELIUS HUNTERSVILLE:..... 980-722-7301
SOUTH: MATTHEWS MINT HILL:..... 704-634-8864
CLT NEIGHBORHOOD & DEVELOPMENT..... 704-336-7988
WELL / SEPTIC: 980-314-1680
CITY PLANNING: 704-336-2205
REGISTER OF DEEDS: 704-336-2443
MECKLENBURG TAX OFFICE.....704-336-7600
LEADPAINT RALEIGH: 919-707-5950

For additional needs visit our website MeckPermit.com

RESIDENTIAL PLAN SUBMITTIAL PROCESS

Effective February 6, 2017, the Residential Plans Submittal Process will implement new requirements for project submittals.:

1. Residential construction projects that are less than 100 square feet do not require plan review.
2. Decks and screened porches do not require plan review.
3. The Residential Drawing Submittal Checklist has also changed. Please refer to our website **MeckPermit.com** for the most current requirements for plan submittal.

Basic requirements for plan submittal are:
Plans are drawn to scale.

1. Designer, engineer, or architect name, telephone and address.
2. Property owner name/ address/ name of job.
3. Plan size: a minimum 8 1/2 x11 for projects 500 square foot and under.
4. Plan size: a minimum 11 x 17 for projects over 500 square foot.
5. Plans should show all dimensions of footings, foundations, framing details (floor, wall, roof) and elevations. Provide all construction material types including roof, wall coverings and energy requirements.

NOTES:_____

_____
_____
_____
_____
_____
_____
_____
_____
_____
_____
_____
_____

PERMITS

1. When is a permit required?

NCACP Section 204.3.1 No person may commence or proceed with the construction, reconstruction, alteration, repair, movement to another site, removal or demolition of any building without first securing from the Inspection Department having jurisdiction, any and all permits required by the State Building Code.

EXCEPTION: Permits shall not be required for any work costing fifteen thousand dollars or less, UNLESS THE WORK INVOLVES:

a. The addition, repair or replacement of load bearing members or structures;

b. The installation, extension of any plumbing system; general repair may not need a permit to be performed.

c. The installation, extension, alteration of any heating or cooling system; general repair may not need a permit to be performed.

d. The installation, extension, alteration of an electrical wire system;

e. The use of materials not permitted by this code; or

f. The addition of roofing, excluding replacement of like grade or fire resistance roofing.

2. Is labor cost included in the total cost of the permit valuation?

NCACP Section 204.6 Yes, permit valuations shall include total cost, such as electrical, gas, mechanical, plumbing equipment, fire protection and other systems, including materials and labor.

3. Does an accessory building need to be permitted?

Section R101.2.1 Accessory buildings. 01/2015

Accessory buildings with any dimension greater than 12 feet (3658mm) must meet the provisions of this code. Accessory buildings may be constructed without a masonry or concrete

foundation, except in coastal high hazard or ocean hazard areas, provided that all of the following conditions are met:
1. The accessory building shall not exceed 400 square feet (37m2) or one story in height;
2. The building is supported on a wood foundation of minimum 2x6 or 3x4 mudsill of approved wood in accordance with Section R317; and
3. The building is anchored to resist overturning and sliding by installing a minimum of one ground anchor at each corner of the building. The total resisting force of the anchors shall be equal to 20 psf (958 Pa) times the plan area of the building.

Not all accessory buildings will require a permit. Any building where **all** dimensions, including the mean roof height, are 12 ft or less does not require building permits and would only require a zoning permit.

4. Does an accessory structure need to be permitted?

R101.2.2 Accessory structures. [01/2015] Accessory structures are not required to meet the provisions of this code **except** decks, gazebos, retaining walls as required by Section R404.4, detached masonry chimneys built less than 10' from other buildings, pools or spas per appendix G, or detached carports. Other examples of accessory structures not requiring a permit are fencing, arbors (unless attached to the house or a deck), bbq pits, playground equipment and yard art.

Exception: Portable lightweight aluminum or canvas type carports not exceeding 400 sq ft or 12' mean roof height and tree houses supported solely by a tree are exempt from the provisions of this code.

INSPECTIONS

Process

The work being scheduled for inspection shall be ready at the time the inspection request is made. The Division's goal is 85% or better of inspections performed on the date requested and requests can be made by phone, on our automated system by calling 704-336-8000, or account holders can go online at www.meckpermit.com and sign into their account dashboard to request and inspection. If assistance is needed you can contact our administrative or customer service team at 980-314-2633. All inspection results are public records and available for viewing on our website at www.meckpermit.com. The General Contractor or property owner shall make inspection request for the Building Permit. Requests for electrical, plumbing or mechanical inspections shall be made by the trade contactors listed on the permit when part of a project. The inspections and procedures outline below will assist you in understanding the requirements for obtaining all State required inspections however if there is any question concerning what's required please discuss with your inspector.

Needed on Site

For an inspection, the following is needed on site:

- Job must be ready for the inspection requested.
- Address must be plainly visible from the street (Placard or other).
- Required approved plans on site.
- All pertinent information needed for site review shall be included with plans such as truss layouts and design sheets, I-joists layout or beam specifications when installed.

There are no partial residential inspections other than partial rough trade inspections for under slab areas and the optional inspections listed below, all the permitted work for the type of inspection request should be ready at time of request.

Inspection Requirements

The following is an outline of the different types of inspections Mecklenburg County provides, both required by the State under Section 107 of the NC Administrative Code and Policies and optional inspections requested by a permit holder.

(FT) Footing Inspection

To be scheduled after the trenches are excavated, all grade stakes are installed, all reinforcing steel and supports are in place and approximately tied, all necessary forms and bulkheads are in place and braced, but **before any concrete is placed**. All filled building lots require a Subgrade Verification Form found on our website at www.meckpermit.com . Footer width is measured at the base of the trench and should be at least 12" below grade at the time of the inspection.

(MS or SL) Under Slab Inspection

To be scheduled after all forms have been placed, all electrical, plumbing and/or heating and air conditioning facilities in place, all crushed stone, vapor retarder, reinforcing steel with supports and ties, and all welded wire fabric is installed, when required. All thickened areas and grade beams must be installed.

EXCEPTION: Inspection is not required for driveway slabs, patio slabs, sidewalks (exterior flat work), etc… however a driveway or any flat concrete work that is within 10' of the structure will need to be installed by final inspection if drainage away from a buildings foundation is a concern.

(FD) Foundation Inspection

To be scheduled after all foundation supports or piers are installed and prior to backfill on the exterior or interior of the foundation. This inspection is to check the placement of the foundation walls on footers, the foundation itself, the anchor bolts or straps and the ground clearance. The crawl space leveling, backfilling and positive drainage will be inspected with the framing inspection. Insulation shall not be installed

on the foundation walls (closed crawl space) or floor systems installed prior to foundation inspection. The foundation damp-proofing/waterproofing and any foundation damp-proofing/waterproofing should not be installed until after the foundation inspection. Although damp-proofing/waterproofing along the drainage is a requirement of the code, under certain conditions, there is not a required inspection specifically for it.

(RF) Rough-In Inspections all trades

To be scheduled when all framing is complete and the building is dried in (roofing felt or shingles in place). All parts of the plumbing, mechanical, and electrical system which will be hidden from view in the finished building must be complete and ready for inspection.

(FR) Building Frame Inspection

To be scheduled after the roof (*minimum felt paper and roof boots*), wall, ceiling and floor framing is complete with appropriate blocking, bracing and fire stopping in place. The following items should be in place and visible for inspection:

1. Insulation baffles when required;
2. Chimneys, vents, flashing for roofs and wall openings;
3. All trade rough-ins must be complete;
4. Windows and exterior doors should be installed and flashed;
5. Exterior weather barrier installed;
6. All brick lintels that are required to be bolted to the framing for support shall be in place. Lintels that are supported by brick or masonry as it is installed will be inspected at a later date;
7. All penetrations in wall plates must be fire stopped;
8. Crawl space penetrations must be caulked to prevent air movement.

(IN) Insulation Inspection

To be scheduled after the building framing and trade rough-in inspections are complete. All wall insulation must be in place. Depth markers for blown in attic insulation are required every 300 sq ft of attic at the wall insulation inspection. Chimney insulation must be properly secured to prevent contact with the firebox. Blown in attic insulation and crawl space insulation should be installed after dry wall and inspected with the final inspection.

(FI) Final Inspection

Final inspections should be made for each trade after completion of the work authorized under the technical codes. All projects shall be accessible for inspection between 8am and 5pm, Monday – Friday except by appointment. The project is not finished until all final inspections are compete. A building final is required before utility services will connect for new structures. Floor covers are not required to be installed for any final inspections except in bathroom areas under a water closet. All plumbing fixtures must be installed. Rough grades must be complete and all driveways, walks and patios may need to be installed to verify slope away from structure. Permanent addresses shall be posted on all new dwellings and all permanent handrails/guards installed.

Other Inspections

In addition to the inspections listed above, the Inspection Department may require other inspections to ascertain compliance with the Residential Code based upon specific project issues or construction methods utilized on a given project.

Optional Inspections

There are several inspections that are optional services at the request of the permit holder, some optional inspections have additional fees as listed below:

A. **(SH)**-Sheathing/energy encapsulation inspections. This inspection is made when interior areas need

to be insulated and encapsulated before setting tubs/fireplaces or permit holder wishes to install exterior covers before the full framing inspection is ready. One and two family dwellings are $50 each trip and townhouses are $25 each.

B. **(TU)**-Temporary utilities inspections. This is for temporary electrical (TP) or heat (TH) to a structure prior to a final approval, no occupancy allowed. The cost for TP (electrical) is $90 per open trade on a permit and TH (gas) is $90 per open trade on the permit.

C. **(SS)-**Saw Service. Saw service is available with an electrical permit that has been issued for the project and there is no additional fee for a saw service inspection.

Additional information

Please check our website for additional information covering:

1. **Auto-notification** (alerts you when your inspection is next)
2. **Recap fees** (Additional charges or credit for your project's pass-rate. (See fee ordinance pass rate incentive program).
3. **Inspection By Appointment –IBA** (this is a premium service with an additional fee to set an appointment for a specific time for an inspection)
4. **H1- Homeowner access program** (this features allows contractors to setup an inspection at no charge for an inspector to call a homeowner to make an appointment for access to their home)

NOTES:_____

_____

_____

_____

_____

BUILDING PLANNING

1. When is a one-hour exterior wall required in a single-family residence?

Section R302 Exterior walls with a fire separation distance less than 3 feet shall have not less than a one-hour fire-resistive rating for fire exposure from both sides. Projections beyond the exterior wall shall not extend more than 12 inches. Openings shall not be permitted in exterior walls less than 3 feet from the property line. This distance shall be **measured perpendicular to the line used to determine the fire separation distance.**

TABLE R302.1 01/2013
EXTERIOR WALLS

EXTERIOR WALL ELEMENT		MINIMUM FIRE-RESISTANCE	MINIMUM FIRE SEPERATION DISTANCE
WALLS	(Fire-resistance rated)	1 hour-tested in accordance with ASTM E 119 or UL 263 with exposure from both sides	≤ 3feet
	(Not fire-resistance rated)	0 hours	≥ 3 feet
PROJECTIONS	(Fire-resistance rated)	1 hour on the underside	< 3 feet
	(Not fire-resistance rated)	0 hours	≥ 3feet
OPENINGS IN WALLS	Not allowed	N/A	< 3 feet
	~~25% maximum of wall area~~	~~0 hours~~	~~3 feet~~
	Unlimited	0 hours	≥ 3 feet
PENETRATIONS	All	Comply with Section R302.4	≤ 3feet
		None required	≥ 3feet

For SI: 1 foot=304.8 mm.
N/A = Not Applicable

2. What are the requirements for openings from a garage into a dwelling?

SectionR302.5.1 [01/2015] Opening protection. Openings from a private garage directly into a room used for sleeping purposes shall not be permitted. Other openings between the garage and residence shall be equipped with solid wood doors not less than 1-3/8 inches (35 mm) in thickness, solid or honeycomb core steel doors not less than 1-3/8 inches (35 mm) thick, or 20-minute fire-rated doors.

EXCEPTION:[01/2015] **A disappearing/pull-down stairway to uninhabited attic space with minimum ⅜-inch (9.53 mm) (nominal) fire retardant-treated structural panel is deemed to meet Table R302.6 Dwelling/Garage Separation of not less than ½-inch (12.7 mm) gypsum board or equivalent applied to garage side.**

3. Is a window required in a bathroom?

Section R303.3 Bathrooms, water closet compartments and other similar rooms shall be provided with an aggregate glazing area in windows of not less than 3 square feet, one-half of which must be operable.

EXCEPTION: The glazed areas shall not be required where artificial light and a mechanical ventilation system are provided. The minimum ventilation rates shall be 50 cfm for intermittent ventilation or 20 cfm for continuous ventilation. Ventilation air from the space shall be exhausted directly to the outside.

4. What is the minimum ceiling height?

Section R305 Habitable space, hallways, bathrooms, toilet rooms, laundry rooms and portions of basements containing these spaces shall have a ceiling height of not less than 7 feet (2134 mm). ⇨

EXCEPTION:

1. For rooms with sloped ceilings, at least 50 percent of the required floor area of the room must have a ceiling height of at least 7 feet (2134 mm) and no portion of the required floor area may have a ceiling height of less than 5 feet (1524 mm).
2. Bathrooms shall have a minimum ceiling height of 6 feet 8 inches (2032 mm) at the center of the front clearance area for fixtures as shown in Figure R307.1. (See Next Page)

   The ceiling height above fixtures shall be such that the fixture is capable of being used for its intended purpose. A shower or tub equipped with a showerhead shall have a minimum Ceiling height of 6 feet 8 inches (2032 mm) above a minimum area 30 inches (762 mm) by 30 inches (762 mm) at the showerhead.
3. Beams and girders spaced not less than 4 feet (1219 mm) on center may project not more than 6 inches (152 mm) below the required ceiling height.

NOTES:

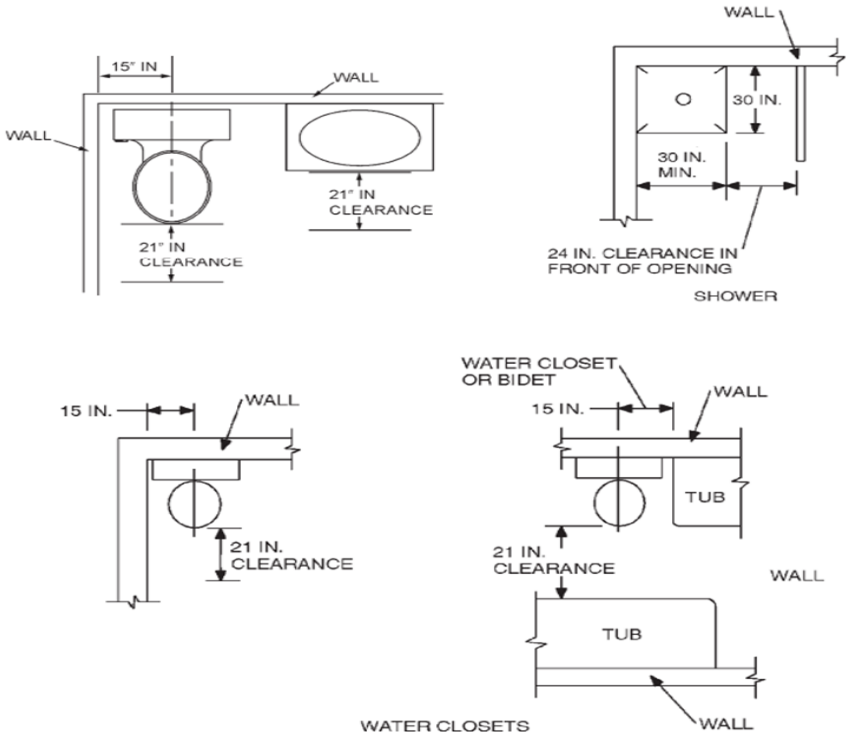

FIGURE R307.1
MINIMUM FIXTURE CLEARANCES

5. What is required for a stairway?

R311.7.1 Width. Stairways shall not be less than 36 inches (914 mm) in clear width at all points above the permitted handrail height and below the required headroom height. Handrails shall not project more than 4.5 inches (114 mm) on either side of the stairway and the minimum clear width of the stairway at and below the handrail height, including treads and landings, shall not be less than 31½ inches (787 mm) where a handrail is installed on one side and 27 inches (698 mm) where handrails are provided on both sides.

EXCEPTION: **01/2016**

The width of spiral stairways shall be in accordance with Section R311.7.9.1. Stairways not required for egress may be as narrow as 26 inches.

6. What are the requirements for smoke alarms?

R314.3 Location. Smoke alarms shall be installed in the following locations:

A. In each sleeping room.

B. Outside each separate sleeping area in the immediate vicinity of the bedrooms.

C. On each additional story of the dwelling, including basements and habitable attics (finished) but not including crawl spaces, or uninhabitable (unfinished) attics, and uninhabitable (unfinished) attic stories ~~and uninhabitable attics~~. In dwellings or dwelling units with split levels and without an intervening door between the adjacent levels, a smoke alarm installed on the upper level shall suffice for the adjacent lower level provided that the lower level is less than one full story below the upper level.

When more than one smoke alarm is required to be installed within an individual dwelling unit the alarm devices shall be interconnected in such a manner that the actuation of one alarm will activate all of the alarms in the individual unit.

7. When and where are CO_2 alarms required?

R315.1 Carbon monoxide alarms. All new construction of one-and two-family dwellings and townhouses within which fuel-fired appliances or fireplaces are installed or that have attached garages shall be provided with an approved carbon monoxide alarm installed outside of each separate sleeping area in the immediate vicinity of the bedroom(s) as directed by the alarm manufacturer.

R315.2 Where required-existing dwellings. For existing dwellings, where interior alterations, repairs or additions requiring a building permit occur, or where one or more sleeping rooms are added or created, or where fuel-fired appliances or fireplaces are added or replaced, carbon monoxide alarms shall be provided in accordance with Section 315.1.⇨

EXCEPTION: Work involving the exterior surfaces of dwellings, such as the replacement of roofing or siding, or the addition or replacement of windows or doors, or the addition of a porch or deck, or the installation of a fuel-fire appliance that cannot introduce carbon monoxide to the interior of the dwelling, are exempt from the requirements of this section.

R315.3 Alarm requirements. The required carbon monoxide alarms shall be audible in all bedrooms over background noise levels with all intervening doors closed. Single station carbon monoxide alarms shall be listed as complying with UL 2034 and shall be installed in accordance with this code and the manufacturer's installation instructions. Battery powered, plug-in, or hard-wired alarms are acceptable for use.

8. How many vents are required in a foundation?

R408.1.1 Foundation vent sizing. The minimum net area of ventilation openings shall be not less than 1 square foot (0.0929m^2) for each 150 square feet (13.9 m^2) of crawl space ground area. ⇨

EXCEPTION:[01/2012] **The total area of ventilation openings may be reduced to 1/1,500 of the of the under-floor area where the ground surface is treated with an approved vapor retarder material in accordance with Section R408.2 and the required openings are placed to provide cross–ventilation of the space. The installation of operable louvers shall not be prohibited.**

NOTES:_____

FOOTINGS

1. When is a footing inspection required?

NCACP 107.1.1 Footing inspections shall be made **after** the trenches are excavated, all grade stakes are installed, all reinforcing steel and supports are in place and appropriately tied, all necessary forms are in place and braced but **before** any concrete is placed.

2. When is a soil test required?

Section R401.4 A soil test will be required when footings are excavated in areas likely to have expansive, compressible, shifting or other unknown soil characteristics. Soil test will also be required when the existing soils do not meet the assumed 2000 psf or when the design requires a greater soil bearing capacity. The building official shall determine if a soil test is required to determine the soil's characteristics at a specific location. This test shall be performed by an approved agency using an approved method.

3. Is 2500 psi concrete the minimum allowable for footings?

Section R402.2 Yes, but only under moderate weather conditions. See Table R402.2 for other concrete applications.

4. What is the minimum depth of a footing?

Section R403.1.4 **01/2015** All exterior footings and foundation systems shall extend below the frost line specified in Table R301.2(1). In no case shall the bottom of the exterior footings be less than 12 inches below the ~~undisturbed ground surface or engineered fill~~ finished grade.

EXCEPTION: Frost protected footings constructed in accordance with Section R403.3 and footings and foundations erected on solid rock shall not be required to extend below the frost line.

5. **Does a footing need to be level?**

Section R403.1.5 The top surface of footings shall be level (1/2 inch in 10 feet) or shall be brought level, under the width of the wall, with masonry units with full mortar joints. The bottom surface of footings may have a slope not exceeding one-unit vertical in 10 units horizontal (10-percent slope). Footings shall be stepped where it is necessary to change the elevation of the top surface of the footings or where the slope of the bottom surface of the footings will exceed one-unit vertical in ten units horizontal (10-percent slope).

Illustration on page 23.

6. **What is the minimum footing size for a masonry fireplace?**

Section R1003.2 Footings for masonry chimneys shall be constructed of concrete or solid masonry at least **12 inches (305 mm) thick** and shall extend at least **12 inches (305 mm) beyond the face of the foundation or support wall on all sides**. Footings shall be founded on natural undisturbed earth or engineered fill below frost depth. In areas not subjected to freezing, footings **shall be at least 12 inches (305 mm) below finished grade.**

NOTES:_____

_____

_____

_____

_____

_____

_____

_____

_____

_____

_____

TABLE R403.1 06/2013

MINIMUM WIDTH OF CONCRETE, PRECAST OR MASONRY FOOTINGS (INCHES)[a]

	LOAD-BEARING VALUE OF SOIL (PSF)			
	1,500	[2,000]	3,000	4,000
CONVENTIONAL LIGHT-FRAME CONSTRUCTION				
1-STORY	12[b]	12[b]	12	12
2-STORY	15[b]	12[b]	12	12
3-STORY	23	17	12	12
4-INCH BRICK VENEER OVER LIGHT FRAME OR 8-INCH HALLOW CONCRETE MASONRY				
1-STORY	12[b]	12[b]	12	12
2-STORY	15[b]	15[b]	12	12
3-STORY	32	24	16	12
8-INCH SOLID OR FULLY GROUTED MASONRY				
1-STORY	16	12[b]	12	12
2-STORY	29	21	14	12
3-STORY	42	32	21	16

For SI: 1-inch = 25.4 mm, 1 pound per square foot = 0.0479 kPa.

a. Where minimum footing width is 12 inches, use of a single wythe of solid or fully grouted 12-inch nominal concrete masonry units is permitted.

b. A minimum footing width of 12" is acceptable for monolithic slab foundation.

	1 (One) Story		2 (Two) Story	
Area	Pier	Footing	Pier	Footing
50	8" x 16"	1' - 4" x 2' - 0" x 8"	8" x 16"	1' - 4" x 2' - 6" x 8"
100	8" x 16"	1" - 4" x 2' - 0" x 8"	8" x 16"	2' - 0" x 2' - 0" x 10"
150	8" x 16"	2' - 0" x 2' - 0" x 8"	16" x 16"	2' - 8" x 2' x - 8" x 10"
200	8" x 16"	2' - 4" x 2' - 4" x 10"	16" x 16"	3' - 0" x 3' - 0" x 10"
250	–	–	16" x 16"	3' - 4" x 3' - 4" x 1' - 0"
300	–	–	16" x 16"	3' - 8" x 3' - 8" x 1" - 0"

2 1/2 (Two & One Half) Story		
Area	Pier	Footing
50	8" x 16"	1' -4" x 2' -6" x 8"
100	16" x 16"	2' -6" x 2' -6" x 10"
150	16" x 16"	3' -0" x 3' -0" x 10"
200	16" x 16"	3'-11" x 3' -8" x 1'-0"
250	16" x 24"	4' -0" x 4' -0" x 1' -0"
300	16" x 24"	4' -6" x 4' -6" x 1' -0"

* SEE NEXT PAGE FOR FOOTNOTES

**SEE NOTES BELOW

TABLE 403.1a

For SI: 1 inch = 25.4 mm, 1 foot = 304.8 mm, 1 pound per square inch = 6.895 kPa, 1 pound per square foot = 0.0479 kPa.

1. Pier sizes are based on hollow CMU capped with 4 inches of solid masonry or concrete for 1 (one) story and 8 inches of solid masonry or concrete for 2 (two) and 2-1/2 (Two and one half) story houses or shall have cavities of the top course filled with concrete or grout or other approved methods. Mortar shall be Type S.
2. Footing sizes are based on 2000 psf allowable soil bearing and 2500 psi concrete. This table is based upon the limitations of a tributary area using dimensional framing lumber only.
3. Centers of piers shall bear in the middle one-third of the footings. Girders must have full bearing on piers. Footings shall be full thickness over the entire area of the footing.
4. Pier sizes given are minimum. For height/thickness limitations see Section R606.6.
5. Area in table is for first level being supported by pier and footing (square foot).

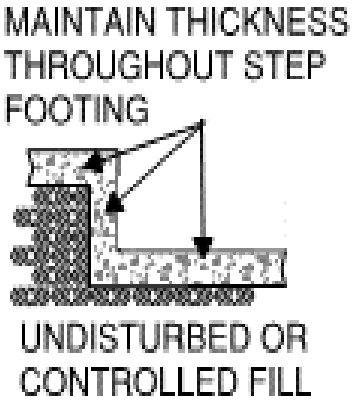

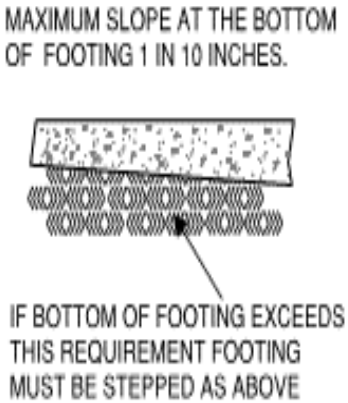

NOTES:
1. FOOTING SIZES ARE BASED ON SOIL WITH ALLOWABLE SOIL PRESSURE OF 2000 POUNDS PER SQUARE FOOT. FOOTINGS ON SOIL WITH LOWER ALLOWABLE SOIL PRESSURE SHALL BE DESIGNED IN ACCORDANCE WITH CURRENT ENGINEERING PRACTICES.
2. FOOITNG PROJECTIONS SHALL NOT EXCEED THE FOOTING THICKNESS
3. EXTERIOR FOOTINGS SHALL NOT BE EXTENDED BELOW THE FROST LINE UNLESS OTHEREISE PROTECTED AGAINST FROST HEAVE. IN NO CASE SHALL EXTERIOR FOOTINGS BEL LESS THAN 12 INCHES BELOW GRADE.

NOTES:

FOUNDATIONS

1. **When is a foundation inspection required?**

NCACP Section 107.1.3 To be made after all foundation supports are installed. This inspection is to check foundation supports, crawl space leveling, ground clearances, and positive drainage when required. Do not backfill footings until after this inspection.

2. **What is the maximum number of stories allowed to be constructed on a pier and curtain wall?**

Section R404.1.5.3 Not more than 2 stories in height.

3. **What is the maximum unsupported height of masonry piers?**

Section R404.1.5.4 & R606.6 The maximum unsupported height of **hollow** masonry piers is 4 times the least dimension of the pier. For **solid** masonry piers, the max is 10 times the least dimension of the pier.

4. **Are solid masonry units required to have full bed and head joints?**

Section R607.2.2.1 & R607.2.2.2 All solid or hollow masonry units shall be laid with full head and bed joints

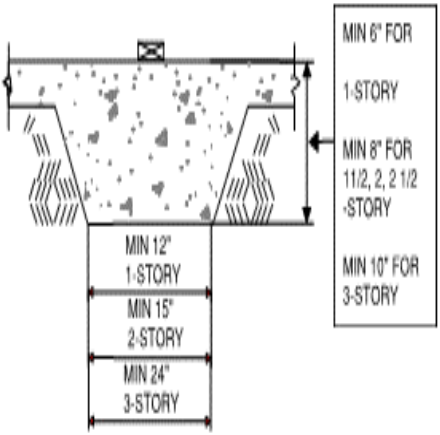

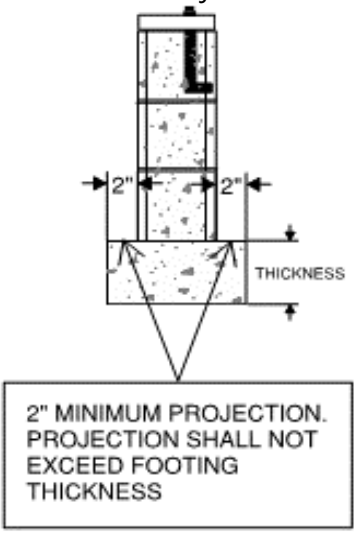

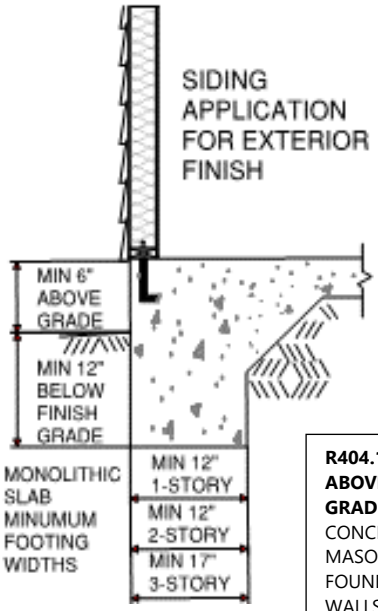

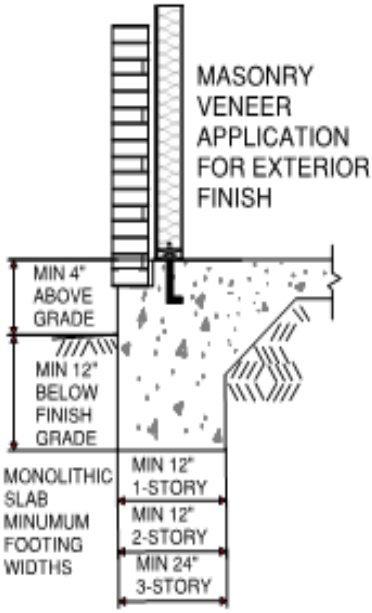

R404.1.6 HEIGHT ABOVE FINISHED GRADE. CONCRETE AND MASONRY FOUNDATION WALLS SHALL EXTEND ABOVE THE FINISHED *GRADE* ADJACENT TO THE FOUNDATION AT ALL POINTS A MINIMUM OF 4 INCHES (102 MM) WHERE MASONRY VENEER IS USED AND A MINIMUM OF 6 INCHES (152 MM) ELSEWHERE.

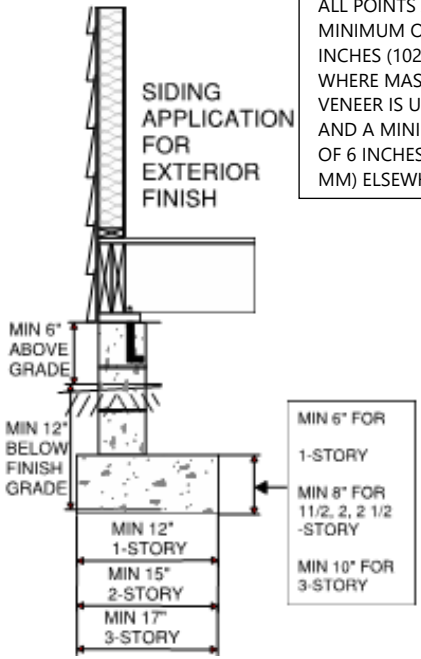

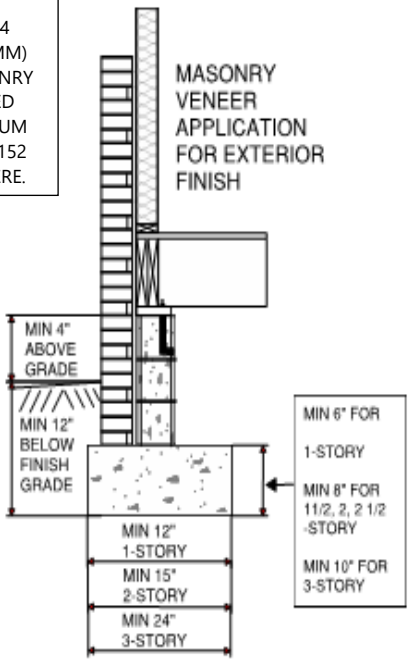

SLABS

1. When is a slab inspection required?

NCACP Section 107.1.2 Under slab inspection is to be made **after** all forms, all under slab electrical, plumbing and/or heating and air conditioning, all crushed stone, vapor retarder, all reinforcing steel with supports tied and/or all welded wire fabric is installed, when required, but **before** any concrete is placed. All thickened areas and grade beams must be installed. Verification of termite treatment is required at this time.

EXECEPTION: An inspection is not required for driveway slabs, patio slabs, sidewalks etc. which are considered non-habitable spaces.

2. Are footings required under interior load-bearing walls in slab on grade construction?

Section R403 Yes, footings are required under interior load-bearing walls and all other load-bearing conditions. **See illustrations on page 24.**

3. When is a 4" base required under slabs and what material should be used?

Section R506.2.2 A 4-inch-thick base course consisting of clean graded sand, gravel, crushed stone or crushed blast-furnace slag passing a 2-inch sieve shall be placed on the prepared sub grade when the slab is below grade.

EXCEPTION: A base course is not required when the concrete slab is installed on well-drained or sand-gravel mixture soils classified as Group I according to the United Soil Classification System in accordance with Table R405.1 in the International Residential Code.

4. How much backfill is allowed before a compaction test would be required?

Section R506.2.1 Fill material shall be free of vegetation and foreign material. The fill shall be compacted to assure uniform support of the slab, and except where *approved*, the fill depths shall not exceed 24 inches (610 mm) for clean sand or gravel and 8 inches (203 mm) for earth. A compaction test is required when fill placement exceeds 24"

in depth. A compaction test may also be required under certain soil conditions.

5. **What is the correct lap of a vapor barrier?**
   01/2015

Section R506.2.3 A 6 mil (0.006 inch; 152 μm) polyethylene or approved vapor retarder with joints lapped **not less than 6 inches** (152 mm) shall be placed between the concrete floor slab and the base course or the prepared subgrade where no base course exists.

Exception: The vapor retarder may be omitted:

1. **From detached garages, utility buildings and other unheated accessory structures.**
2. **For unheated storage rooms having an area of less than 70 square feet (6.5 m2) and carports.**
3. **From driveways, walks, patios and other exterior flatwork ~~not likely to be enclosed and heated at a later date.~~**
4. **Where approved by the building official, based on local site conditions.**
5. **From attached garages where floor space at parking level is unheated.**

6. **What is the minimum specified strength (psi) of concrete for slabs on grade?**

Table R402.2 Basement slabs and interior slabs on grade require 2500 psi concrete. Porches, carport slabs and steps exposed to weather and garage floors require 3000-psi air entrained concrete.

7. **What is the required attachment for framed walls for slabs and masonry foundations?**

Section R403.1.6 The wood sole plate at exterior walls on monolithic slabs and masonry foundations shall be anchored to the foundation with anchor bolts spaced a maximum of 6 feet on center. Anchor bolts shall also be located within 12 inches of the corner. Bolts shall be at least 1/2 inch in diameter and shall extend a minimum of 7 inches into masonry or concrete. There shall be at minimum two anchors per sill plate. Embedment depth of anchor straps shall be per manufacturer instructions.

Bolting Locations and Installations

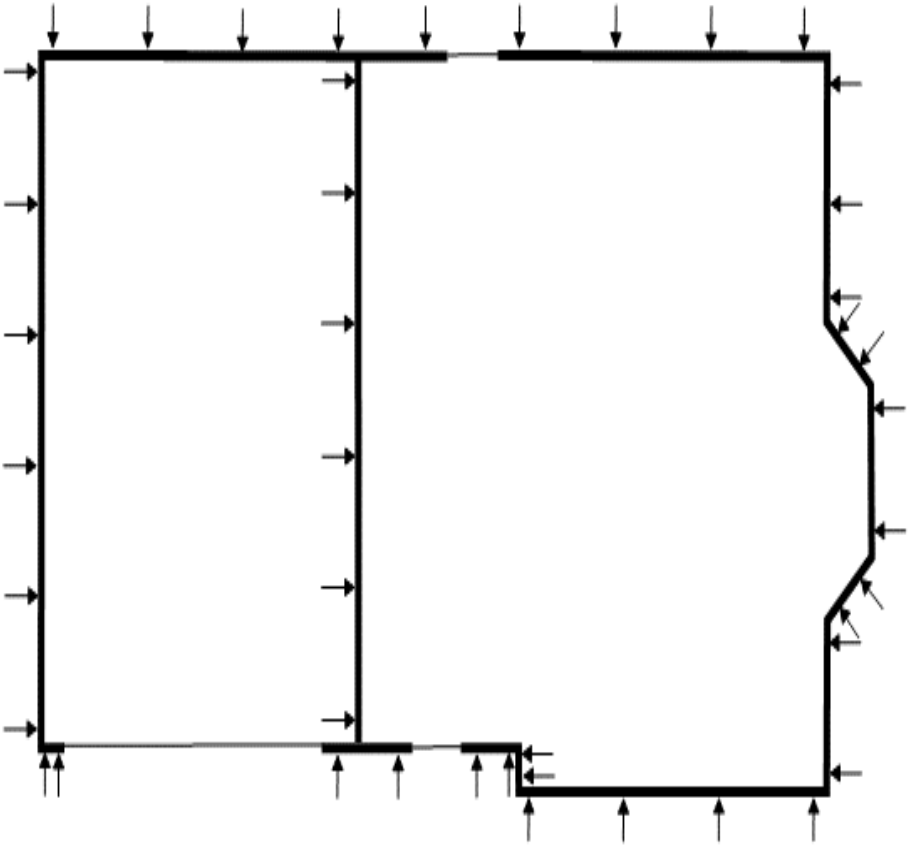

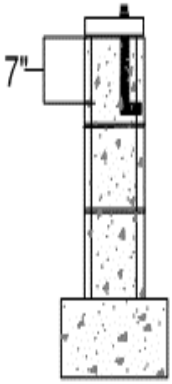

MASONRY FOUNDATION

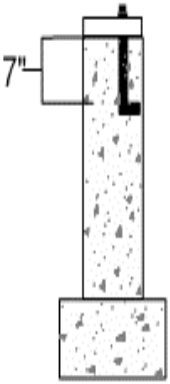

CONCRETE FOUNDATION

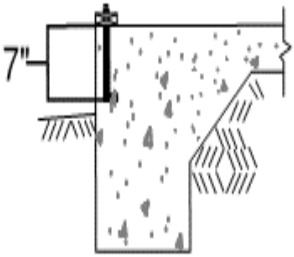

MONOLITHIC SLAB

TYPES OF BOLTS OR STRAPS	BRAND NAME	LOCATION-SPACING
1/2 anchor bolt w/washer (2)	N/A	Within 12" of each corner & 6' o.c. min 7" embedment
22 3/4" anchor strap (4)	SIMPSON MAB 23	Per Manufacturers' Instructions
14 1/2" anchor strap (4)	SIMPSON MAB 15	Per Manufacturers' Instructions

Bolting Locations and Installations

1. **See Illustration on page 28** in this booklet for Installation locations for above.
2. There shall be a minimum of 2 bolts per plate section.
3. Bolts shall extend a minimum of 7" into masonry or concrete.
4. Embedment depth of anchor straps shall be per manufacturer Instructions.
5. Fastening schedule are as follows: For Simpson strap anchors, side nailing 2 – 10d x1 1/2 and 4 –10d x 1 1/2 nail in top of plate (total). For Hutch strap anchor STA16 (6)10d on each side (12 total). For Hutch strap anchor STA 18 (4)10d each side (8 total).

NOTE: It is the responsibility of the permit holder to install the anchors in accordance with the manufacturer requirements. The above fasteners are approved alternates in Mecklenburg County. Should you wish to use another manufacturers' anchor, you will need to provide the manufacturers' installation instructions.

NOTES:_____

_____

_____

_____

_____

_____

_____

_____

FRAMING

1. When is, a framing inspection required?

NCACP Section 107.1.5 Framing inspections shall be made after the roof, walls, ceiling and floor framing is complete with appropriate blocking, bracing and fire stopping in place. The following Items must be in place and be visible for inspection:

1. Pipes; to check for notching, boring or other penetrations.
2. Chimneys and vents; to check for clearances from combustibles, fire stopping and proper construction.
3. Windows & doors, flashing for roofs, chimneys and wall openings.
4. Insulation baffles; may be required during framing inspection when insulating a cathedral ceiling and the 1" air space required between insulation and the roof deck is questionable.
5. All lintels that are required to be bolted to the framing for support shall not be covered by any exterior or interior wall or ceiling finish material before approval. Work may continue without approval for lintels supported on masonry or concrete.
6. Trade rough-ins complete.
7. House wrap installed

2. Can a bathroom exhaust fan be vented to the soffit vent?

Section R303.3 Bathrooms, water closet compartments and other similar rooms shall be provided with aggregate glazing area in windows of not less than 3 square feet (0.3 m2), one-half of which must be openable.

EXCEPTION: The glazed areas shall not be required where artificial light and a mechanical *ventilation* system are provided. The minimum *ventilation* rates shall be 50 cubic feet per minute (24 L/s) for intermittent *ventilation* or 20

cubic feet per minute (10 L/s) for continuous *ventilation*. *Ventilation* air from the space shall be exhausted directly to the outside. Bathroom exhausts shall be vented directly to the outside through an approved cap.

3. What is the minimum tread depth on a straight flight of stairs?

Section R311.7.4.2, The minimum tread depth shall be 9 inches (229 mm). The tread depth shall be measured horizontally between the vertical planes of the foremost projection of adjacent treads and at a right angle to the tread's leading edge. The greatest tread depth within any flight of stairs shall not exceed the smallest by more than 3/8 inch (9.5 mm). Winder treads shall have a minimum tread depth of 9 inches (229 mm) measured at a point out 12 inches (305 mm) from the side where the treads are narrower. Winder treads shall have a minimum tread depth of 4 inches (102 mm) at any point. Within any flight of stairs, the greatest winder tread depth at the 12 inch (305 mm) walk line shall not exceed the smallest by more than 3/8 inch (9.5 mm).

4. What are the minimum exit requirements?

Section R311.2 **01/2012; R310.1 & R310.1.1** Egress door. At least one exterior egress door shall be provided for each dwelling unit. The egress door shall be side-hinged, and shall provide a minimum clear width of 32 inches (813mm) when measured between the face of the door and the stop, with the door open 90 degrees (1.57 rad). The minimum clear height of the door opening shall not be less than 78 inches (1981 mm) in height measured from the top of the threshold to the bottom of the stop. Other exterior doors shall not be required to comply with these minimum dimensions. All interior ~~and~~ egress doors and a minimum of one exterior egress door shall be readily openable from the side from which egress is to be made without the use of a key or special knowledge or effort.

R310.1 Basements, habitable attics and every sleeping room shall have at least one operable emergency escape and rescue opening. Where basements contain one or more sleeping rooms, emergency egress and rescue openings shall be required in each sleeping room. Where emergency escape and rescue openings are provided, they shall have a sill height of not more than 44 inches (1118 mm) above the floor. Where a door opening having a threshold below the adjacent ground elevation serves as an emergency escape and rescue opening and is provided with a bulkhead enclosure, the bulkhead enclosure shall comply with Section

R310.3. Emergency escape and rescue openings with a finished sill height below the adjacent ground elevation shall be provided with a window well in accordance with Section R310.2. Emergency escape and rescue openings shall open directly into a public way, or to a yard or court that opens to a public way.

R310.1.1 Minimum opening area. All emergency escape and rescue openings shall have a minimum net clear openable area of 4 square feet (0.372 m^2). The minimum net clear opening height shall be 22 inches (558 mm). The minimum net clear opening width shall be 20 inches (508 mm). Emergency escape and rescue openings must have a minimum total glazing area of not less than 5 square feet (0.465 $m^{2)}$ in the case of a ground floor level window and not less than 5.7 square feet (0.530 m2) in the case of an upper story window. The net clear opening dimensions required by this section shall be obtained by the normal operation of the emergency escape and rescue opening from the inside.

NOTES:_____

_____

_____

_____

_____

5. **Does a wood column supporting a beam in a basement need to be attached?**

Section 407.3 Yes. The columns shall be restrained to prevent lateral displacement at the top and bottom ends. Wood columns shall not be less in nominal size than 4 inches by 4 inches (102 mm by 102 mm). Steel columns shall not be less than 3-inch-diameter (76 mm) Schedule 40 pipe manufactured in accordance with ASTM A 53 Grade B or *approved* equivalent.

EXCEPTION: In Seismic Design Categories A, B and C, columns no more than 48 inches (1219 mm) in height on a pier or footing are exempt from the bottom end lateral displacement requirement within under-floor areas enclosed by a continuous foundation.

6. **How much can a stud be notched or drilled?**

Section R602.6 Notching- Any stud in an exterior wall or bearing partition may be cut or notched to a depth not exceeding 25 percent of its width. Studs in nonbearing partitions may be notched to a depth not to exceed 40 percent of a single stud width. Notching of bearing studs shall be on one edge only and not to exceed one-fourth the height of the stud. Notching shall not occur in the bottom or top 6 inches (152 mm) of bearing studs.

Section R602.6 Drilling- Any single stud may be bored or drilled, provided that the diameter of the resulting hole is no more than 60 percent of the stud width, the edge of the hole is no more than 5/8 inch (16 mm) to the edge of the stud, and the hole shall not be closer than 6 inches (152 mm) from an adjacent hole or notch. Holes not exceeding 3/4 inch (19 mm) diameter can be as close as 1-1/2 inches (38.1 mm) on center spacing. Studs located in exterior walls or bearing partitions drilled over 40 percent and up to 60 percent shall also be doubled with no more than two successive doubled studs bored. See Figures R602.6(1) and R602.6(2).

7. How do I repair the top plates of an exterior wall when drilled OR notched?

R602.6.1 Drilling and notching of top plate. When piping or ductwork is placed in or partly in an exterior wall or interior load-bearing wall, necessitating cutting, drilling or notching of the top plate by more than 50 percent of its width, a galvanized metal tie not less than 0.054-inch-thick (1.37 mm) (16 ga) and 1-1/2 inches (38 mm) wide shall be fastened across and to the plate at each side of the opening with not less than eight - 10d (0.148 inch diameter) nails having a minimum length of 1-1/2 inches (38 mm) at each side or equivalent. The metal tie must extend a minimum of 6 inches past the opening. See Figure R602.6.1.

Exception: When the entire side of the wall with the notch or cut is covered by wood structural panel sheathing.

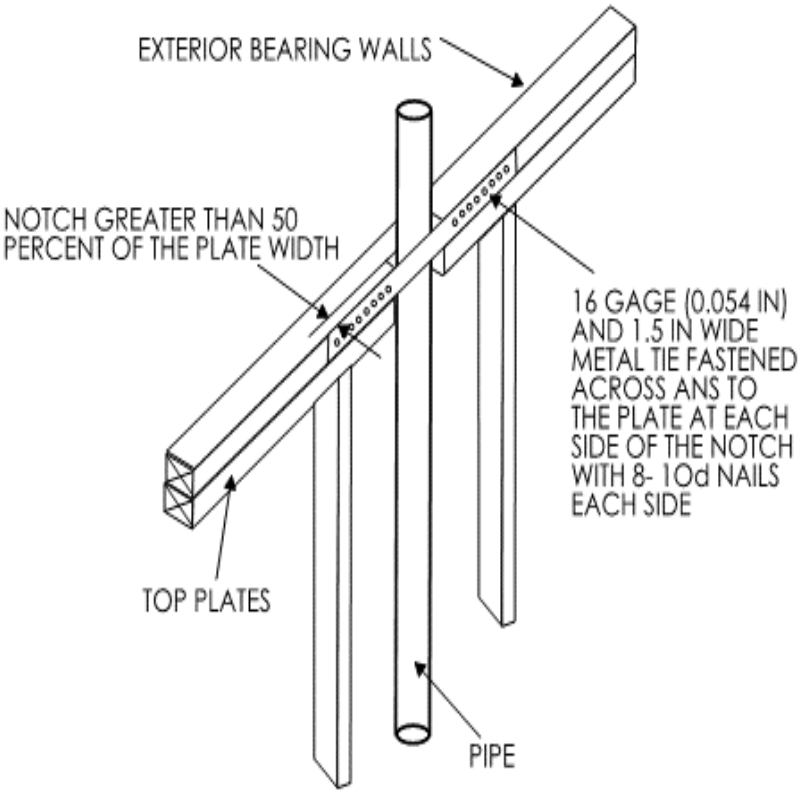

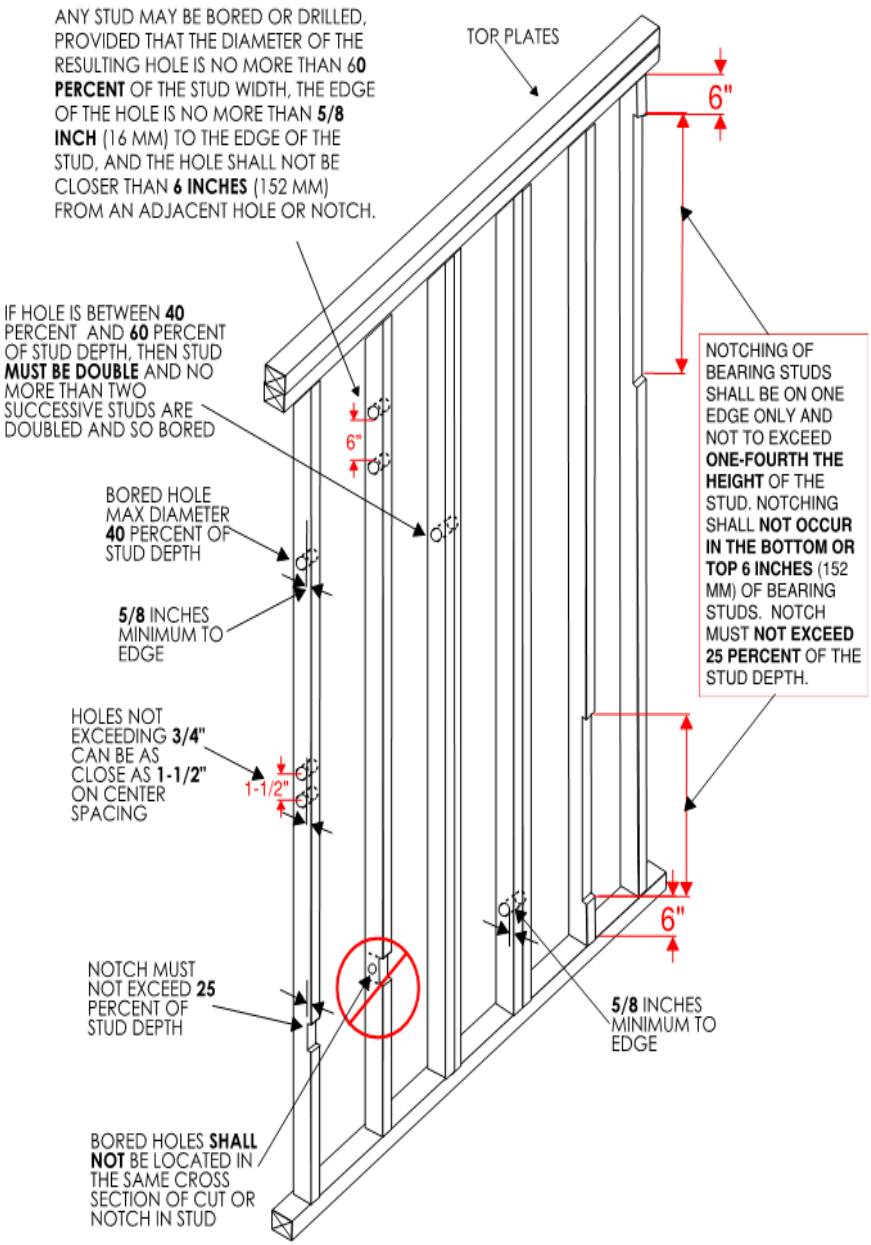

FOR SI: 1 INCH = 25.4mm
NOTE: CONDITION FOR EXTERIOR AND BEARING WALLS

FIGURE R602.6(1)
NOTCHING AND BORED HOLE LIMITATIONS FOR EXTERIOR WALL AND BEARING WALLS

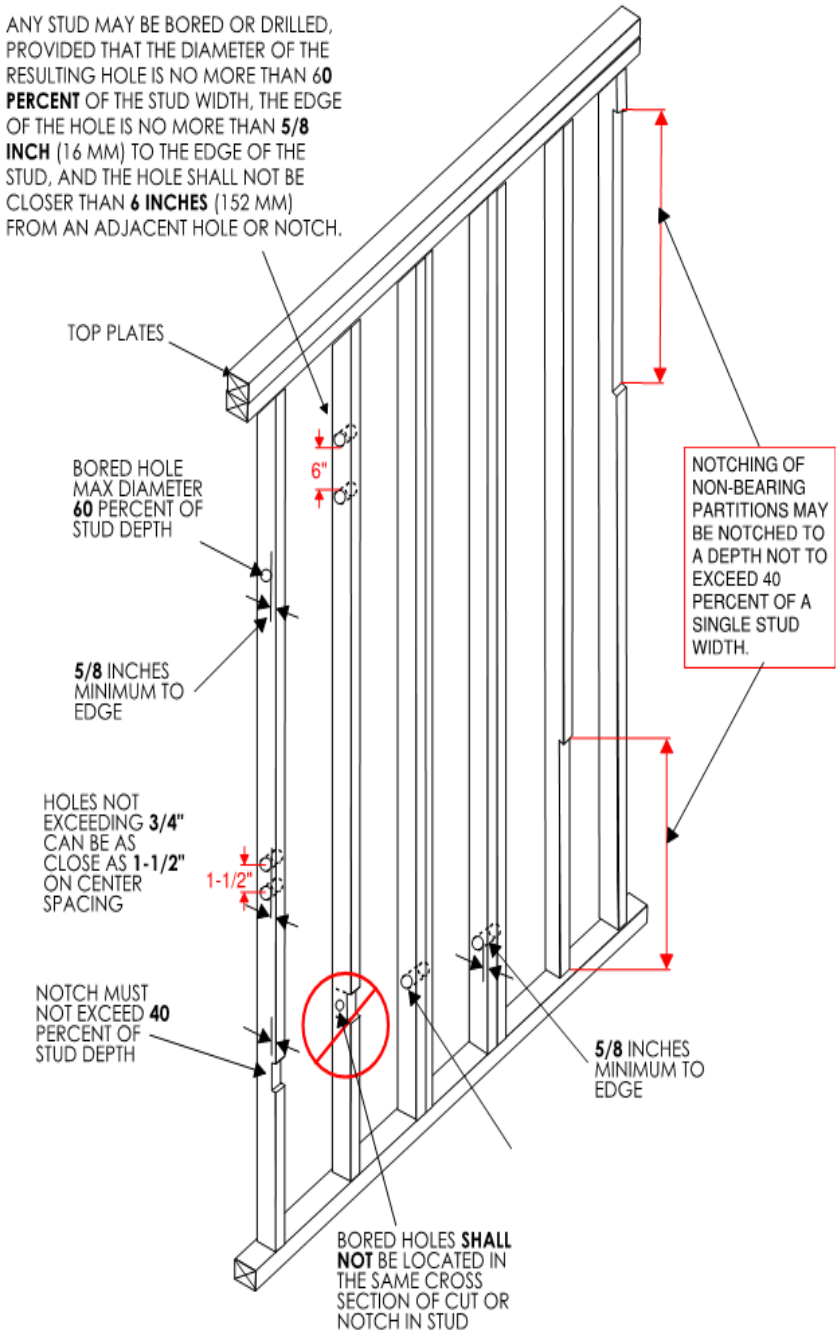

FOR SI: 1 INCH = 25.4mm

FIGURE R602.6(2)
NOTCHING AND BORED HOLE LIMITATIONS FOR INTERIOR NONBEARING WALLS

8. **The code requires a double floor joist under load-bearing partitions that run parallel to the joist. Can this double joist be separated to allow piping?**

Section R502.4 Yes. Joists under parallel bearing partitions shall be of adequate size to support the load. The code does allow the joists to be spaced apart to accommodate pipes, ducts, vents; however, the joists shall be full depth solid blocked with lumber not less than 2-inches in nominal thickness spaced not more than 4 feet on center.

9. **Can single, double, or triple floor joists, be drilled in center third of the span?**

Section R502.8 There are restrictions on the size of the hole and where drilling is permitted. Structural floor members shall not be cut, bored, or notched in excess of the limitations specified. See table below and illustration on **page 38**.

LUMBER SIZES AND THEIR ALLOWANCES			
JOIST SIZE	**MAX HOLE**	**MAX NOTCH DEPTH**	**MAX END NOTCH**
2X4	**NONE**	**NONE**	**NONE**
2X6	**1-1/2”**	**7/8”**	**1-3/8”**
2X8	**2-3/8”**	**1-1/4”**	**1-7/8”**
2X10	**3**	**1-1/2”**	**2-3/8**
2X12	**3-3/4”**	**1-7/8”**	**2-7/8”**

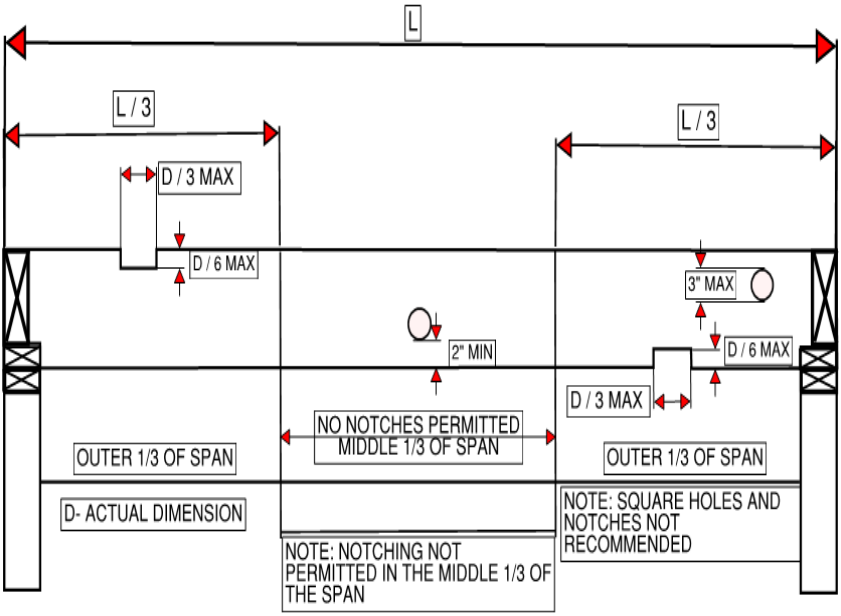

10. Do electrical penetrations in exterior walls need to be fireblocked?

Section R602.8 & R302.11 Yes. Fire blocking shall be provided to cut off all concealed draft openings (both vertical and horizontal) and to form an effective fire barrier between stories and between a top story and the roof space.

11. How much lateral bracing is required in exterior walls?

Section R602.10 The requirements for lateral bracing varies based on the wall bracing method being used. Refer to the

Wall Bracing Code and Commentary **R602.10** effective 09/2013 for corner and panel location requirements.

12. When should the siding be attached to the exterior wall?

Section R701.2 Products sensitive to adverse weather shall not be installed until adequate weather protection for the installation is provided. Exterior sheathing shall be dry before applying exterior cover.

13. Where is flashing required on brick veneer finishes?

Section R703.7.5 Flashing of 6 mil (0.152 mm) poly or other corrosion-resistive material shall be located beneath the first course of masonry above finished ground level above the foundation wall or slab and at other points of support, including structural floors, shelf angles and lintels when masonry veneers are designed in accordance with Section R703.7. Top of base flashing shall be installed with a minimum 2-inch (51 mm) lap behind building paper or water-repellent sheathing. See Section R703.8 for additional requirements.

14. Is bridging required at mid span of floor joists?

Section R502.7.1 Joists exceeding a nominal 2 inches by 12 inches (51 mm by 305 mm) shall be supported laterally by solid blocking, diagonal bridging (wood or metal), or a continuous 1-inch-by-3-inch (25.4 mm by 76 mm) strip nailed across the bottom of joists perpendicular to joists at intervals not exceeding 8 feet (2438 mm).

Exception: Trusses, structural composite lumber, structural glued-laminated members and I-joists shall be supported laterally as required by the manufacturer's recommendations.

15. **The code requires hangers on the double trimmer joist at floor openings to support the header and/or girder when the member spans more than 6 feet. What is required when those members are less than 6 feet?**

Section R502.10 Openings in floor framing shall be framed with a header and trimmer joists. When then header joist span does not exceed 4 feet (1219 mm), the header joist may

be a single member the same size as the floor joist. Single trimmer joists may be used to carry a single header joist that is located within 3 feet (914 mm) of the trimmer joist bearing. When the header joist span exceeds 4 feet (1219 mm), the trimmer joists and the header joist shall be doubled and of sufficient cross section to support the floor joists framing into the header. *Approved* hangers shall be used for the header joist to trimmer joist connections when the header joist span exceeds 6 feet (1829 mm). Hangers or ledgers are required for header joist spans. Tail joists over 12 feet (3658 mm) long shall be supported at the header by framing anchors or on ledger strips not less than 2 inches by 2 inches (51 mm by 51 mm).

16. **In the design of truss construction, what are the drilling and notching requirements?**

Section R502.11.3 Truss members and components shall not be cut, notched, spliced or otherwise altered in any way without the approval of a registered design professional.

17. **How can a roof be framed for a cathedral ceiling?**

Section 802.3.1 When rafters are used to create a cathedral ceiling; one method would be to design a ridge beam with proper support at each end to carry the roof loads. These loads will have direct bearing that is carried down to footings. Another method would be an engineered truss application for a roof system.

18. Can you explain Figure R802.5.1 braced rafter construction in The North Carolina Residential Code?

Figure R802.5.1 This application needs to be used when the rafters are over spanned. Use the span tables R802.5.1 (1) and R802.5.1 (2) to check rafter spans. **See Pages 66-69** Remember, span is always measured horizontally, not along rafter length.

The purlin or single ply header must be the same size as the rafter. The 2 x 4 down brace may have a maximum unbraced length of 8 feet. If brace exceeds 8 feet, it must be laterally braced at mid-point or may be T-braced. **See Illustration on p.70**.

19. What roof pitch would not require an underlayment?

Chapter 9 This chapter deals with several types of roof coverings. All roof covering would require an underlayment unless the manufacturer's instructions do not require one.

20. Can the underlayment be installed running up the pitch of the roof?

Section R905.2.7 No, per this section the underlayment shall be applied shingle fashion, parallel to and starting from the eave.

21. Which is the proper way to run the starter course for asphalt shingles?

Section R905 Installation shall be installed per manufacturer's instructions. It is common for manufacturers to require you to cut the tabs off the ends of shingles so the cement strip is located at the edge of the eaves. Check with manufacturer to assure proper installation.

22. Can a standard brick lintel be used at the fireplace opening?

Section R1001.7 Yes, as long as the lintel is noncombustible and capable of supporting imposed loads.

NOTES:_____

_____

_____

_____

_____

_____

TABLE R-602.3(5)
SIZE, HEIGHT AND SPACING OF WOOD STUDS [a,d]

STUD SIZES(INCHES)	BEARING WALLS						
	LATERALY UNSUPPORTED STUD HEIGHT [a]	MAXIMUM SPACING WHEN SUPPORTING A ROOF-CEILING ASSEMBLY OR A HABITABLE ATTICASSEMBLY, ONLY (INCHES)	MAXIMUM SPACING WHEN SUPPORTING ONE FLOOR, PLUS A ROOF-CEILING ASSEMBLY OR A HABITABLE ATTIC ASSEMBLS (INCHES)	MAXIMUM SPACING WHEN SUPPORTING TWO FLOORS, PLUS A ROOF-CEILING ASSEMBLY OR A HABITABLE ATTIC ASSEMBLY (INCHES)	MAXIMUM SPACING WHEN SUPPORTING ONE FLOOR HEIGHT (FEET)	LATERALLY UNSUPPORTED STUD HEIGHT (FEET)	MAXIMUM SPACING (INCHES)
		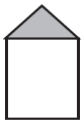	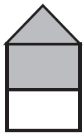	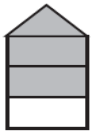			
2X3[b]	---	---	---	---	---	10	16
2X4	10	24[c]	16[c]	---	24	14	24
3X4	10	24	24	16	24	14	24
2X5	10	24	24	---	24	16	24
2X6	10	24	24	16	24	20	24

For SI: 1 inch = 25.4 mm, 1 foot = 304.8 mm, 1 square foot = 0.093m2.

a. Listed heights are distances between points of lateral support placed perpendicular to the plane of the wall. Increases in unsupported height are permitted where justified by analysis.

b. Shall not be used in exterior walls.

c. A habitable attic assembly supported by 2 X 4 studs is limited to a roof span of 32 feet. Where the roof span exceeds 32 feet, the wall studs shall be increased to 2 X 6 or the studs shall be designed in accordance with accepted engineering practice.

d. **One half of the studs interrupted by a wall opening shall be placed immediately outside the jack studs on each side of the opening as king studs to resist wind loads. King studs shall extend full height from sole plate to top plate of the wall.**

TABLE R602.3(1)- WALL FRAMING [a, e]

CONNECTION[b] (NAIL SIZE AND POSITION EXAGGERATED FOR ILLUSTRATIVE PURPOSES)	FASTENER MINIMUM NOMINAL LENGTH IN INCHES X MINIMUM NOMINAL NAIL DIAMETER IN INCHES	QUANTITY PER CONNECTION, ORSPACING BETWEEN FASTENERS[d]
Top or sole plate to stud (face nail)	3-1/2" × 0.162" nail(16dcommon)[c]	3
	3" × 0.148" nail (10d common)	4
	3-1/4" × 0.131" nail	5
	3" × 0.131" nail	
	3-1/4" × 0.120" nail	
	3" × 0.120" nail	
Stud to top or sole plate (toe nail) 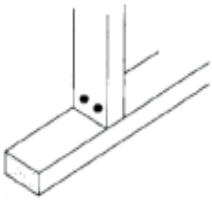	2-1/2" × 0.131" nail (8d common)[c]	4
	3-1/2"×0.162"nail (16d common)	3
	3" × 0.148" nail (10d common)	4
	3-1/4" × 0.131" nail	
	3" × 0.131" nail	
	3-1/4" × 0.120" nail	
	3" × 0.120" nail	
	2-3/8" × 0.113" nail	5
	2" × 0.113" nail	
	2-1/4" × 0.105" nail	
	2-1/4" × 0.099" nail	
Cap/top plate laps and intersections 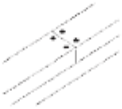	3-1/2"×0.162"nail (16d common)[c]	2 EACH SIDE OF LAP
	3" × 0.148" nail	
	3-1/4" × 0.131" nail	3 EACH SIDEOF LAP
	3" × 0.131" nail	
	3-1/4" × 0.120" nail	
	3" × 0.120" nail	
Diagonal bracing 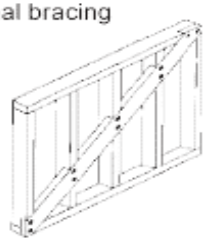	2-1/2" × 0.131" nail (8d common)[c]	2
	3-1/2"×0.162"nail (16d common)	
	3" × 0.148" nail (10d common)	
	3-1/4" × 0.131" nail	
	3" × 0.131" nail	
	3-1/4" × 0.120" nail	3
	3" × 0.120" nail	
	2-3/8" × 0.113" nail	
	2" × 0.113" nail	4
	2-1/4" × 0.105" nail	
	2-1/4" × 0.099" nail	
Sole plate to joist or blocking at braced panels	3-1/2" × 0.135" nail (16d BOX)[c]	3 PER 16″ SPACE

	3-1/2" × 0.162" nail (16d common)	2 PER 16″ SPACE
	3" × 0.148" nail (10d common)	3 PER 16″ SPACE
	3-1/4" × 0.131" nail	
	3" × 0.131" nail	4 PER 16″ SPACE
	3-1/4" × 0.120" nail	
	3" × 0.120" nail	
Sole plate to joist or blocking	3-1/2" × 0.162" nail (16dcommon)[c]	16″ o.c
	3" × 0.148" nail (10d common)	8″ o.c
	3-1/4" × 0.131" nail	
	3" × 0.131" nail	
	3-1/4" × 0.120" nail	
	3" × 0.120" nail	

TABLE R602.3(1)- CONTINUED WALL FRAMING

CONNECTION[b] (NAIL SIZE AND POSITION EXAGGERATED FOR ILLUSTRATIVE PURPOSES)	FASTENER MINIMUM NOMINAL LENGTH IN INCHES X MINIMUM NOMINAL NAIL DIAMETER IN INCHES	QUANTITY PER CONNECTION OR SPACING BETWEEN FASTENERS[d]
Double top plate 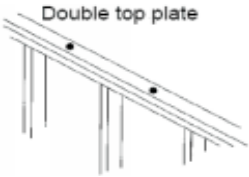	3" × 0.148" nail (10d common)[c]	16″ o.c
	3-1/2" × 0.162" nail (16dcommon)	
	3-1/4" × 0.131" nail	12″ o.c
	3" × 0.131" nail	
	3-1/4" × 0.120" nail	
	3" × 0.120" nail	
Double Studs	3" × 0.148" nail (10d common)[c]	12″ o.c
	3-1/2" × 0.162" nail (16dcommon)	
	3-1/4" × 0.131" nail	8″ o.c
	3" × 0.131" nail	
	3-1/4" × 0.120" nail	
	3" × 0.120" nail	
Corner Studs 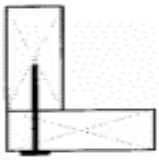	3-1/2" × 0.162" nail (16dcommon)[c]	24″ o.c
	3" × 0.148" nail (10d common)	16″ o.c
	3-1/4" × 0.131" nail	
	3" × 0.131" nail	
	3-1/4" × 0.120" nail	12″ o.c
	3" × 0.120" nail	

NOTES:_____

TABLE R602.3(1)- CONTINUED, CEILING AND ROOF FRAMING [a, e]

CONNECTION[b] (NAIL SIZE AND POSITION EXAGGERATED FOR ILLUSTRATIVE PURPOSES)	FASTENER MINIMUM NOMINAL LENGTH IN INCHES X MINIMUM NOMINAL NAIL DIAMETER IN INCHES	QUANTITY PER CONNECTION, OR SPACING BETWEEN FASTENERS[d]
Ceiling joist to plate 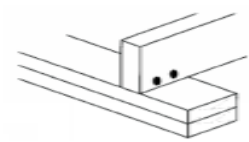	3-1/2" × 0.162" nail(16d common)[c]	3
	3" × 0.148" nail (10d common)	4
	3-1/4" × 0.131" nail	5
	3" × 0.131" nail	
	3-1/4" × 0.120" nail	
	3" × 0.120" nail	
	2-3/8" × 0.113" nail	6
Ceiling joists, laps over partitions Ceiling joist to parallel rafter 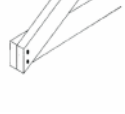	3-1/2"×0.162"nail (16d common)[c]	3
	3" × 0.148" nail (10d common)	4
	3-1/4" × 0.131" nail	
	3" × 0.131" nail	
	3-1/4" × 0.120" nail	
	3" × 0.120" nail	
Collar tie to rafter	3" × 0.148" nail (10d common)	3
	3-1/2"×0.162"nail (16d common)[c]	
	3-1/4" × 0.131" nail	4
	3" × 0.131" nail	
	3-1/4" × 0.120" nail	
	3" × 0.120" nail	
Jack rafter to hip, toe-nailed	3" × 0.148" nail (10d common)	3
	3-1/2"×0.162"nail (16d common)[c]	
	3-1/4" × 0.131" nail	4
	3" × 0.131" nail	
	3-1/4" × 0.120" nail	
	3" × 0.120" nail	
Jack rafter to hip, face nailed	3-1/2" × 0.162" nail (16d common)	2
	3" × 0.148" nail (10d common)	3
	3-1/4" × 0.131" nail	
	3" × 0.131" nail	

	3-1/4" × 0.120" nail	4
	3" × 0.120" nail	
Roof rafter to plate (toe-nailed) 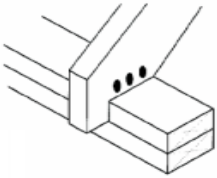	2-1/2" × 0.131" nail (8d common) [c]	3
	3-1/2" × 0.162" nail (16d common)	
	3" × 0.148" nail (10d common)	
	3-1/4" × 0.131" nail	
	3" × 0.131" nail	
	3-1/4" × 0.120" nail	4
	3" × 0.120" nail	
	2-3/8" × 0.113" nail	5
	2" × 0.113" nail	
	2-1/4" × 0.105" nail	
	2-1/4" × 0.099" nail	6

TABLE R602.3(1)- CONTINUED, CEILING AND ROOF FRAMING [a, e]

CONNECTION[b] (NAIL SIZE AND POSITION EXAGGERATED FOR ILLUSTRATIVE PURPOSES)	FASTENER MINIMUM NOMINAL LENGTH IN INCHES X MINIMUM NOMINAL NAIL DIAMETER IN INCHES	QUANTITY PER CONNECTION, OR SPACING BETWEEN FASTENERS[d]
Roof rafter to 2-by ridge beam, face nailed 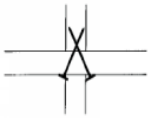 (only the attachment of the top rafter is illustrated	3-1/2" × 0.162" nail (16dcommon)[c]	2
	3" × 0.148" nail (10d common)	3
	3-1/4" × 0.131" nail	
	3" × 0.131" nail	
	3-1/4" × 0.120" nail	4
	3" × 0.120" nail	
Roof rafter to 2-by ridge beam, toe-nailed 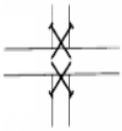	3-1/2"×0.162"nail (16d common)[c]	2
	3" × 0.148" nail (10d common)	3
	3-1/4" × 0.131" nail	
	3" × 0.131" nail	
	3-1/4" × 0.120" nail	4
	3" × 0.120" nail	

NOTES:

TABLE R602.3(1)- CONTINUED, CEILING AND ROOF FRAMING [a, e]

CONNECTION[b] (NAIL SIZE AND POSITION EXAGGERATED FOR ILLUSTRATIVE PURPOSES)	FASTENER MINIMUM NOMINAL LENGTH IN INCHES X MINIMUM NOMINAL NAIL DIAMETER IN INCHES	QUANTITY PER CONNECTION, OR SPACING BETWEEN FASTENERS[d]
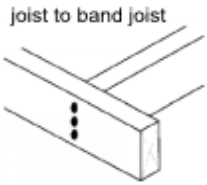	3-1/2" × 0.162" nail (16d common)[c]	3
	3" × 0.148" nail (10d common)	5
	3-1/4" × 0.131" nail	6
	3" × 0.131" nail	
	3-1/4" × 0.120" nail	
	3" × 0.120" nail	
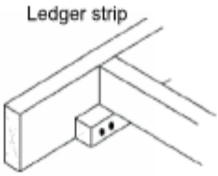	3-1/2"×0.162"nail (16d common)[c]	3
	3" × 0.148" nail (10d common)	4
	3-1/4" × 0.131" nail	
	3" × 0.131" nail	
	3-1/4" × 0.120" nail	
	3" × 0.120" nail	
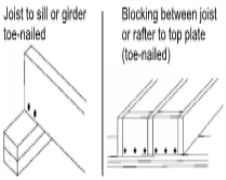	2-1/2" × 0.131" nail (8d common)[c]	3
	3" × 0.148" nail (10d common)	
	3-1/4" × 0.131" nail	
	3" × 0.131" nail	4
	3-1/4" × 0.120" nail	
	3" × 0.120" nail	
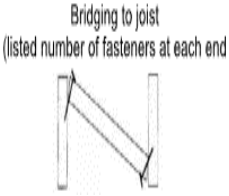	2-1/2" × 0.131" nail (8d common)[c]	2
	3-1/4" × 0.120" nail	3
	3" × 0.120" nail	
	2-3/8" × 0.113" nail	
	2" × 0.113" nail (6d common)	4
	2-1/4" × 0.105" nail	3
	2-1/4" × 0.099" nail	4
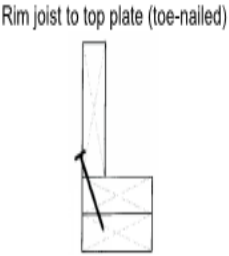	2-1/2" × 0.113" (3d box)[c]	6" o.c.
	3-1/2" × 0162" nail (16d common)	8" o.c.
	3" × 0.148" nail (10d common)	4" o.c.
	3-1/4" × 0.131" nail	
	3" × 0.131" nail	
	3-1/4" × 0.120" nail	
	3" × 0.120" nail	4" o.c.
	2-3/8" × 0.113" nail	4" o.c.
	2" × 0.113" nail (6d common)	3" o.c.
	2-1/4" × 0.105" nail	
	2-1/4" × 0.099" nail	

TABLE R602.3(1)- CONTINUED, CEILING AND ROOF FRAMING [a, e]

CONNECTION[b] (NAIL SIZE AND POSITION EXAGGERATED FOR ILLUSTRATIVE PURPOSES)	FASTENER MINIMUM NOMINAL LENGTH IN INCHES X MINIMUM NOMINAL NAIL DIAMETER IN INCHES	SPACING OF FASTENERS ALONG THE TOP AND BOTTOM OF THE BEAM, STAGGERED ON EACH SIDE OF EACH LAYER	NUMBER OF FASTENERS AT EACH END AND SPLICE FOR EACH LAYER
Built-up girders and beams 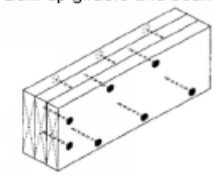	4" × 0.192" nail (20d common)[c]	32" o.c.	2
	3-1/2" × 0.162" nail (16d common)	24" o.c.	3
	3" × 0.148" nail (10d common)		
	3-1/4" × 0.131" nail		
	3" × 0.131" nail		
	3-1/4" × 0.120" nail	16" o.c.	3
	3" × 0.120" nail		
	2-1/2" × 0.131" nail (8d common)	16" o.c.	4

For SI: 1 inch = 25.4 mm, 1 mile per hour = 0.44 m/s, 1 foot = 304.8 mm.

a. This fastening schedule applies to framing members having an actual thickness of 1-1/2" (nominal "2-by" lumber).

b. Fastenings listed above may also be used for other connections that are not listed but that have the same configuration and the same code requirement for fastener quantity/spacing and fastener size (pennyweight and style, e.g., 8d common, "8-penny common nail").

c. This fastener, in the quantity or spacing shown in the rightmost column, comprises the most stringent fastening of the connection listed in the International, National, *International One- and Two-family Dwelling*, International Residential, Standard or Uniform Building Codes.

d. Fastening schedule only applies to buildings of conventional wood frame construction where wind or seismic analysis is not required by the applicable code. In areas where wind or seismic analysis is required, required fastening must be determined by structural analysis. The following are conditions for which codes require structural analysis:

i. For nominal dimensions of nails see Table R602.3(1a)

ii. *North Carolina Residential Code* – buildings located in areas where the design wind speed equals or exceeds 110 mph (177.1 km/h) (3 second gust) or assigned to seismic design categories C, D1 and D2 (with detached one- and two-family dwellings in category C being exempt).

e. Reprinted by permission of the ICC Evaluation Service, LLC from Evaluation Report ESR-1539.

TABLE R602.3(1)- CONTINUED
FASTENER SCHEDULE FOR STRUCTURAL MEMBERS [j]

DESCRIPTION OF BUILDING MATERIALS	DESCRIPTION OF FASTENERS [b, c, e]	SPACING OF FASTENERS	
		EDGES (INCHES) [i]	TERMEDIATE SUPPORT [c, e] (INCHES)
WOOD STRUCTURAL PANNELS, SUBFLOOR, ROOF AND INTERIOR WALL SHEATHING TO FRAMING AND PARTICLEBOARD WALL SHEATHING TO FRAMING			
3/8" - 1/2 "	6d common (2" × 0.113") nail (subfloor wall) 8d common (2-1/2" × 0.131") nail (roof)[f]	6	12 [g]
19/32"- 1"	8d common nail (2-1/2" × 0.131")	6	12 [g]
1-1/8" - 1-1/4"	10d common (3" × 0.148") nail or 8d (2-1/2" × 0.131") deformed nail	6	12
OTHER WALL SHEATHING [h]			
1/2" structural cellulosic fiberboard sheathing	1-1/2" galvanized roofing nail, 7/16" crown or 1" crown staple 16 ga., 1-1/4" long	3	6
25/32" structural cellulosic fiberboard sheathing	1-3/4" galvanized roofing nail, 7/16" crown or 1" crown staple 16 ga., 1-1/2" long	3	6
1/2"gypsum sheathing[d]	1-1/2" galvanized roofing nail, staple galvanized, 1-1/2" long; 1-1/4" screws, Type W or S	7	7
5/8"gypsum sheathing[d]	1-3/4" galvanized roofing nail, staple galvanized, 1-5/8" long; 1-5/8" screws, Type W or S	7	7
WOOD STRUCTURAL PANELS, COMBINATION SUBFLOOR UNDERLAYMENT TO FRAMING			
3/4" and less	6d deformed (2" × 0.120") nail or 8d common (2-1/2" × 0.131") nail	6	12
7/8" – 1"	8d common (2-1/2" × 0.131") nail or 8d deformed (2-1/2" × 0.120") nail	6	12
1-1/8" – 1-1/4"	10d common (3" × 0.148") nail or 8d deformed (2-1/2" × 0.120") nail	6	12

For SI: 1 inch = 25.4 mm, 1 foot = 304.8 mm, 1 mile per hour = 0.447 m/s; 1ksi = 6.895 MPa.

a. Deleted.

b. Staples are 16 gage wire and have a minimum 7/16-inch on diameter crown width.

c. Nails shall be spaced at not more than 6 inches on center at all supports where spans are 48 inches or greater.

d. Four-foot-by-8-foot or 4-foot-by-9-foot panels shall be applied vertically. ⇨

e. Spacing of fasteners not included in this table shall be based on Table R602.3(2).

f. For regions having basic wind speed of 110 mph or greater, 8d deformed (21/2" × 0.120) nails shall be used for attaching plywood and wood structural panel roof sheathing to framing within minimum 48-inch distance from gable end walls, if mean roof height is more than 25 feet, up to 35 feet maximum.

g. For regions having basic wind speed of 100 mph or less, nails for attaching wood structural panel roof sheathing to gable end wall framing shall be spaced 6 inches on center. When basic wind speed is greater than 100 mph, nails for attaching panel roof sheathing to intermediate supports shall be spaced 6 inches on center for minimum 48-inch distance from ridges, eaves and gable end walls; and 4 inches on center to gable end wall framing.

h. Gypsum sheathing shall conform to ASTM C 79 and shall be installed in accordance with GA 253. Fiberboard sheathing shall conform to ASTM C 208.

i. Spacing of fasteners on floor sheathing panel edges applies to panel edges supported by framing members and required blocking and at all floor perimeters only. Spacing of fasteners on roof sheathing panel edges applies to panel edges supported by framing members and required blocking. Blocking of roof or floor sheathing panel edges perpendicular to the framing members need not be provided except as required by other provisions of this code. Floor perimeter shall be supported by framing members or solid blocking. Roof sheathing 7/16-inch or greater in thickness does not require perimeter blocking.

j. For nominal dimensions of nails see Table R602.3(1a).

NOTES:

TABLE R602.3(2)ALTERNATE ATTACHMENTS

NOMINAL MATERIAL THICKNESS (INCHES)	DESCRIPTION [a, b] OF FASTENERS	SPACING [c] OF FASTENERS	
		EDGES (INCHES)	INTERMEDIATE SUPPORTS (INCHES)
WOOD STRUCTURAL PANNELS, SUBFLOOR, ROOF AND INTERIOR WALL SHEATHING TO FRAMING AND PARTICLEBOARD WALL SHEATHING TO FRAMING [f]			
up to 1/2"	Staple 15 ga. 1-3/4″	4	8
	0.097 - 0.099 Nail 2-1/4″	3	6
	Staple 16 ga. 1-3/4″	3	6
19/32″ and 5/8″	0.113 Nail 2″	3	6
	Staple 15 and 16 ga. 2″	4	8
	0.097 - 0.099 Nail 2-1/4″	4	8
23/32″ and 3/4″	Staple 14 ga. 2″	4	8
	Staple 15 ga. 1-3/4″	3	6
	0.097 - 0.099 Nail 2-1/4″	4	8
	Staple 16 ga. 2″	4	8
1″	Staple 14 ga. 2-1/4″	4	8
	0.113 Nail 2-1/4″	3	6
	Staple 15 ga. 2-1/4″	4	8
	0.097 - 0.099 Nail 2-1/2′	4	8
NOMINAL MATERIAL THICKNESS (inches)	DESCRIPTION [a,b] OF FASTENER AND LENGTH (inches)	SPACING [c] OF FASTENERS	
		Edges (inches)	Body of panel [d] (inches)
Floor underlayment; plywood-hardboard-particleboard [f]			
Plywood			
1/4" and 5/16″	1-1/4″ ring or screw shank nail-minimum 12- 1/2 ga. (0.099″) shank diameter	3	6
	Staple 18 ga., 7/8, 3/16 crown width	2	5
11/32″, 3/8″, 15/32″, and 1/2"	1-1/4″ ring or screw shank nail-minimum 12- 1/2 ga. (0.099″) shank diameter	6	8 [e]
19/32″, 5/8″, 23/32″ and 3/4"	1-1/2″ ring or screw shank nail-minimum 12- 1/2 ga. (0.099″) shank diameter	6	8
	Staple 16 ga. 1-1/2″	6	8
Hardboard [f]			
0.200	1-1/2″ long ring-grooved underlayment nail	6	6
	4d cement-coated sinker nail	6	6
	Staple 18 ga., 7/8″ long (plastic coated)	3	6
Particleboard			
1/4"	4d ring-grooved underlayment nail	3	6
	Staple 18 ga., 7/8″ long, 3/16″ crown	3	6
3/8″	6d ring-grooved underlayment nail	6	10
	Staple 16 ga., 1-1/8″ long, 3/8″ crown	3	6
1/2", 5/8″	6d ring-grooved underlayment nail	6	10
	Staple 16 ga., 1-5/8″ long, 3/8″ crown	3	6

For SI: 1 inch = 25.4 mm.

a. Nail is a general description and may be T-head, modified round head or round head.

b. Staples shall have a minimum crown width of 7/16-inch on diameter except as noted.

c. Nails or staples shall be spaced at not more than 6 inches on center at all supports where spans are 48 inches or greater. Nails or staples shall be spaced at not more than 12 inches on center at intermediate supports for floors.

d. Fasteners shall be placed in a grid pattern throughout the body of the panel.

e. For 5-ply panels, intermediate nails shall be spaced not more than 12 inches on center each way.

f. Hardboard underlayment shall conform to ANSI/AHA A135.4.

Table R502.5(1) #1 SYP OR BETTER

GIRDER SPANS [a,b] AND HEADER SPANS [a,b] FOR EXTERIOR BEARING WALLS

(Max spans for Doug fir-larch, hem-fir, southern pine and spruce-pine-fir [b] and required # of jack studs)

GIRDER AND HEADER SUPPORTS	SIZE	GROUND SNOW LOAD (psf)[e]					
		30					
		Building Width[c] Feet					
		20		28		36	
		Span	NJ [d]	Span	NJ [d]	Span	NJ [d]
Roof and ceiling 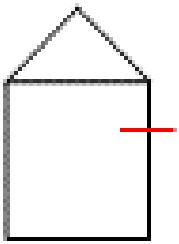	2-2x4	3-6	1	3-2	1	2-10	1
	2-2x6	5-5	1	4-8	1	4-2	1
	2-2x8	6-10	1	5-11	2	5-4	2
	2-2x10	8-5	2	7-3	2	6-6	2
	2-2x12	9-9	2	8-5	2	7-6	2
	3-2x8	8-4	1	7-5	1	6-8	1
	3-2x10	10-6	1	9-1	2	8-2	2
	3-2x12	12-2	2	10-7	2	9-5	2
	4-2x8	9-2	1	8-4	1	7-8	1
	4-2x10	11-8	1	10-6	1	9-5	2
	4-2x12	14-1	1	12-2	2	10-	2
Roof, ceiling and one center bearing floor 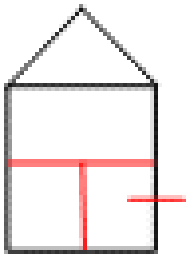	2-2x4	3-I	1	2-9	1	2-5	1
	2-2x6	4-6	1	4-0	1	3-7	2
	2-2x8	5-9	2	5-0	2	4-6	2
	2-2x10	7-0	2	6-2	2	5-6	2
	2-2x12	8-1	2	7-1	2	6-5	2
	3-2x8	7-2	1	6-3	2	5-8	2
	3-2x10	8-9	2	7-8	2	6-11	2
	3-2x12	10-2	2	8-11	2	8-0	2
	4-2x8	8-1	1	5-2	2	4-8	2
	4-2x10	10-1	1	8-10	2	8-0	2
	4-2x12	11-9	2	10-3	2	9-3	2

CONTINUED►

Table R502.5(1) #1 SYP OR BETTER

GIRDER SPANS [a,b] AND HEADER SPANS [a,b] FOR EXTERIOR BEARING WALLS

(Max spans for Doug fir-larch, hem-fir, southern pine and spruce-pine-fir [b] and required # of jack studs)

GIRDER AND HEADER SUPPORTS	SIZE	GROUND SNOW LOAD (psf)[e]					
		30					
		Building Width[c] Feet					
		20		28		36	
		Span	NJ [d]	Span	NJ [d]	Span	NJ [d]
Roof, ceiling and one clear span floor 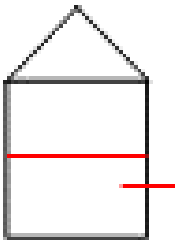 **USE FOR DECKS**	2-2x4	2-8	1	2-4	1	2-1	1
	2-2x6	3-11	1	3-5	2	3-0	2
	2-2x8	5-0	2	4-4	2	3-10	2
	2-2x10	6-1	2	5-3	2	4-8	2
	2-2x12	7-1	2	6-1	3	5-5	3
	3-2x8	6-3	2	5-5	2	4-10	2
	3-2x10	7-7	2	6-7	2	5-11	2
	3-2x12	8-10	2	7-8	2	6-10	2
	4-2x8	7-2	1	6-3	2	5-7	2
	4-2x10	8-9	2	7-7	2	6-10	2
	4-2x12	10-2	2	8-10	2	7-11	2
Roof, ceiling and two center-bearing floors 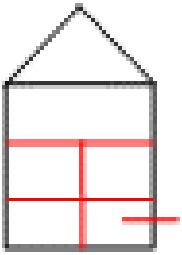	2-2x4	2-7	1	2-3	1	2-0	1
	2-2x6	3-9	2	3-3	2	2-11	2
	2-2x8	4-9	2	4-2	2	3-9	2
	2-2x10	5-9	2	5-1	2	4-7	3
	2-2x12	6-8	2	5-10	3	5-3	3
	3-2x8	5-11	2	5-2	2	4-8	2
	3-2x10	7-3	2	6-4	2	5-8	2
	3-2x12	8-5	2	7-4	2	6-7	2
	4-2x8	4-10	2	4-3	2	3-10	2
	4-2x10	8-4	2	7-4	2	6-7	2
	4-2x12	9-8	2	8-6	2	7-8	2

CONTINUED►

Table R502.5(1) #1 SYP OR BETTER

GIRDER SPANS [a,b] AND HEADER SPANS [a,b] FOR EXTERIOR BEARING WALLS

(Max spans for Doug fir-larch, hem-fir, southern pine and spruce-pine-fir [b] and required # of jack studs)

GIRDER AND HEADER SUPPORTS	SIZE	GROUND SNOW LOAD (psf)[e]					
		30					
		Building Width[c] Feet					
		20		28		36	
		Span	NJ [d]	Span	NJ [d]	Span	NJ [d]
Roof, ceiling and two clear span floors 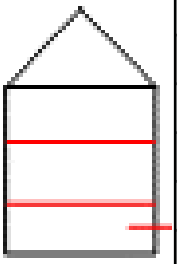	2-2x4	2-1	1	1-8	1	1-6	2
	2-2x6	3-1	2	2-8	2	2-4	2
	2-2x8	3-10	2	3-4	2	3-0	3
	2-2x10	4-9	2	4-I	3	3-8	3
	2-2x12	5-6	3	4-9	3	4-3	3
	3-2x8	4-10	2	4-2	2	3-9	2
	3-2x10	5-11	2	5-1	2	4-7	3
	3-2x12	6-10	2	5-11	3	5-4	3
	4-2x8	5-7	2	4-10	2	4-4	2
	4-2x10	6-10	2	5-11	2	5-3	2
	4-2x12	7-11	2	6-10	2	6-2	3

FOR SI" 1"= 25.4 MM, 1 POUND PER SQ FT=0.0479 kPa

a. Spans are given in feet and inches.

b. Spans are based on minimum design properties for No.2 Grade Lumber of Doug- fir-larch, hem-fir, and SPF**. No 1 or better grade lumber shall be used for southern pine.**

c. Building width is measured perpendicular to the ridge. For widths between those shown, spans are permitted to be interpolated.

d. NJ - Number of jack studs required to support each end. Where the number of required jack studs equals one, the header is permitted to be supported by an approved framing anchor attached to the full-height wall stud and to the header.

e. Use 30 psf ground snow load for cases in which ground snow load is less than 30 psf and the roof live load is equal to or less than 20 psf

Table R502.5(1)

GIRDER SPANS [a,b] AND HEADER SPANS [a,b] FOR INTERIOR BEARING WALLS

(Max spans for Doug fir-larch, hem-fir, southern pine and spruce-pine-fir [b] and required # of jack studs)

HEADERS AND GIRDERS SUPPORTING	SIZE	Building Width[c] Feet					
		20		28		36	
		Span	NJ [d]	Span	NJ [d]	Span	NJ [d]
ONE FLOOR ONLY	2-2x4	3-1	1	2-8	1	2-5	1
	2-2x6	4-6	1	3-11	1	3-6	1
	2-2x8	5-9	1	5-0	2	4-5	2
	2-2x10	7-0	2	6-1	2	5-5	2
	2-2x12	8-1	2	7-0	2	6-3	2
	3-2x8	7-2	1	6-3	1	5-7	2
	3-2x10	8-9	1	7-7	2	6-9	2
	3-2x12	10-2	2	8-10	2	7-10	2
	4-2x8	9-0	1	7-8	1	6-9	1
	4-2x10	10-1	1	8-9	1	7-10	2
	4-2x12	11-9	1	10-2	2	9-1	2
TWO FLOORS	2-2x4	2-2	1	1-10	1	1-7	1
	2-2x6	3-2	2	2-9	2	2-5	2
	2-2x8	4-1	2	3-6	2	3-2	2
	2-2x10	4-11	2	4-3	2	3-10	3
	2-2x12	5-9	2	5-0	3	4-5	3
	3-2x8	5-1	2	4-5	2	3-11	2
	3-2x10	6-2	2	5-4	2	4-10	2
	3-2x12	7-2	2	6-3	2	5-7	3
	4-2x8	6-1	1	5-3	2	4-8	2
	4-2x10	7-2	2	6-2	2	5-6	2
	4-2x12	8-4	2	7-2	2	6-5	2

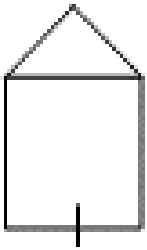

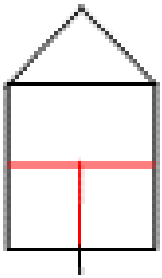

FOR SI" 1"= 25.4 MM, 1 POUND PER SQ FT=0.0479 kPa

CONTINUED►

a. Spans are given in feet and inches.

b. Spans are based on minimum design properties for No.2 Grade Lumber of Doug-fir-larch, hem-fir, and SPF.. **No 1 or better grade lumber shall be used for southern pine.**

c. Building width is measured perpendicular to the ridge. For widths between those shown, spans are permitted to be interpolated.

d. NJ - Number of jack studs required to support each end. Where the number of required jack studs equals one, the header is permitted to be supported by an approved framing anchor attached to the full-height wall stud and to the header.

Table R502.5(3) #2 SYP

GIRDER SPANS AND HEADER SPANS FOR EXTERIOR BEARING WALLS [a,b,c,d,e,f]

(Maximum spans SOUTHERN PINE NO.2 and required # of jack studs)

GIRDER AND HEADER SUPPORTS	SIZE	GROUND SNOW LOAD (psf)[e]					
		30					
		Building Width[c] Feet					
		20		28		36	
		Span	NJ [d]	Span	NJ [d]	Span	NJ [d]
Roof and ceiling 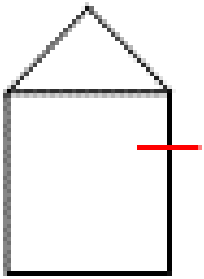	2-2x4	3-3	1	2-10	1	2-7	1
	2-2x6	4-9	1	4-2	1	3-9	1
	2-2x8	5-10	1	5-2	1	4-8	1
	2-2x10	6-6	2	5-9	1	5-3	1
	2-2x12	7-0	2	6-3	2	5-10	1
	3-2x8	7-0	1	6-2	1	5-7	1
	3-2x10	7-8	1	6-10	1	6-3	1
	3-2x12	8-2	2	7-4	1	6-9	1
	4-2x8	7-9	1	6-11	1	6-4	1
	4-2x10	8-6	1	7-8	1	7-0	1
	4-2x12	9-2	1	8-2	1	7-6	1
Roof, ceiling and one center-bearing floor 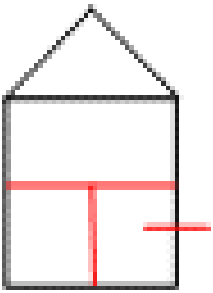	2-2x4	2-8	1	2-4	1	2-2	1
	2-2x6	4-0	2	3-6	1	3-2	1
	2-2x8	4-11	2	4-4	2	3-11	1
	2-2x10	5-7	2	5-0	2	4-7	2
	2-2x12	6-1	3	5-6	2	5-1	2
	3-2x8	5-11	1	5-3	1	4-10	1
	3-2x10	6-6	2	5-11	1	5-5	1
	3-2x12	7-1	2	6-5	2	6-0	2
	4-2x8	6-8	2	6-0	2	5-6	1
	4-2x10	7-4	2	6-7	2	6-1	2
	4-2x12	7-11	2	7-1	2	6-7	2

CONTINUED►

Table R502.5(3) #2 SYP

GIRDER SPANS AND HEADER SPANS FOR EXTERIOR BEARING WALLS [a,b,c,d,e,f]

(Maximum spans SOUTHERN PINE NO.2 and required # of jack studs)

GIRDER AND HEADER SUPPORTS	SIZE	GROUND SNOW LOAD (psf)					
		30					
		Building Width[c] Feet					
		20		28		36	
		Span	NJ [d]	Span	NJ [d]	Span	NJ [d]
Roof, ceiling and one clear span floor 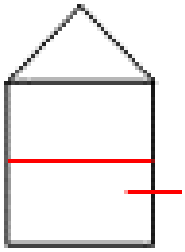 **USE FOR DECKS**	2-2x4	2-5	1	2-1	1	1-10	1
	2-2x6	3-6	1	3-0	1	2-9	1
	2-2x8	4-5	2	3-10	1	3-6	1
	2-2x10	5-1	2	4-6	2	4-1	2
	2-2x12	5-7	2	5-0	2	4-7	2
	3-2x8	5-5	2	4-9	2	4-3	2
	3-2x10	6-0	2	5-5	2	4-11	2
	3-2x12	6-6	2	5-11	2	5-5	2
	4-2x8	6-1	2	5-5	1	4-11	1
	4-2x10	6-9	2	6-0	2	5-6	1
	4-2x12	7-3	2	6-6	2	6-0	2
Roof, ceiling and one center bearing floor 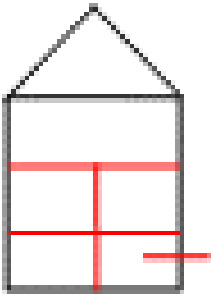	2-2x4	2-3	1	1-11	1	1-9	1
	2-2x6	3-4	1	2-11	1	2-8	1
	2-2x8	4-2	2	3-8	1	3-4	1
	2-2x10	4-9	2	4-3	2	3-11	1
	2-2x12	5-4	2	4-10	2	4-5	2
	3-2x8	5-1	2	4-6	2	4-1	2
	3-2x10	5-9	2	5-2	2	4-9	2
	3-2x12	6-3	2	5-8	2	5-3	2
	4-2x8	5-9	1	5-2	1	4-9	1
	4-2x10	6-5	2	5-9	1	5-4	1
	4-2x12	6-11	2	6-3	2	5-10	1

CONTINUED►

Table R502.5(3) #2 SYP

GIRDER SPANS AND HEADER SPANS FOR EXTERIOR BEARING WALLS [a,b,c,d,e,f]

(Maximum spans SOUTHERN PINE NO.2 and required # of jack studs)

GIRDER AND HEADER SUPPORTS	SIZE	GROUND SNOW LOAD (psf)					
		30					
		Building Width[c] Feet					
		20		28		36	
		Span	NJ [d]	Span	NJ [d]	Span	NJ [d]
Roof, ceiling and two clear span floors 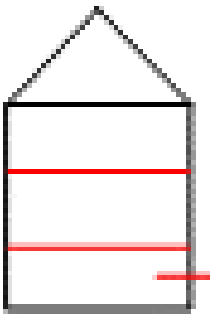	2-2x4	1-10	2	1-6	2	1-4	2
	2-2x6	2-9	2	2-4	2	2-1	2
	2-2x8	3-5	2	3-0	2	2-8	2
	2-2x10	4-0	3	3-6	2	3-2	2
	2-2x12	4-7	3	4-0	3	3-8	2
	3-2x8	4-3	2	3-8	1	3-4	1
	3-2x10	4-11	2	4-3	2	3-10	1
	3-2x12	5-6	2	4-11	2	4-5	2
	4-2x8	7-11	2	4-3	2	3-10	1
	4-2x10	5-7	2	4-11	2	4-5	2
	4-2x12	6-2	3	5-6	2	5-0	2

a. Spans are given in feet and inches.

b. Spans are based on minimum design properties for No.2 Grade Lumber of southern pine only. For other Species, See Table R502.5(1) 2012 NCRC

c. Building width is measured perpendicular to the ridge. For widths between those shown, spans are permitted to be interpolated.

d. NJ - Number of jack studs required to support each end. Where the number of required jack studs equals one, the header is permitted to be supported by an approved framing anchor attached to the full-height wall stud and to the header.

e. Use 30 psf ground snow load for cases in which ground snow load is less than 30 psf and the roof live load is equal to or less than 20 psf

f. One half of the studs interrupted by a wall opening shall be placed immediately outside the jack studs on each side of the opening as king studs to resist wind loads. King studs shall extend the full height from sole plate to top plate of the wall.

Table R502.5(4) #2 SYP

GIRDER SPANS AND HEADER SPANS FOR INTERIOR BEARING WALLS [a,b,c,d,e]

(Maximum spans SOUTHERN PINE NO.2 and required # of jack studs)

GIRDERS AND HEADERS SUPPORTING	SIZE	Building Width[c] Feet					
		20		28		36	
		Span	NJ [d]	Span	NJ [d]	Span	NJ [d]
ONE FLOOR ONLY 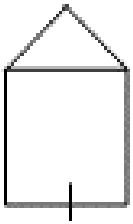	2-2x4	3-1	1	2-8	1	2-5	1
	2-2x6	4-6	1	3-11	1	3-6	1
	2-2x8	5-9	1	5-0	2	4-5	2
	2-2x10	7-0	2	6-1	2	5-5	2
	2-2x12	8-1	2	7-0	2	6-3	2
	3-2x8	7-2	1	6-3	1	5-7	2
	3-2x10	8-9	1	7-7	2	6-9	2
	3-2x12	10-2	2	8-10	2	7-10	2
	4-2x8	9-0	1	7-8	1	6-9	1
	4-2x10	10-1	1	8-9	1	7-10	2
	4-2x12	11-9	1	10-2	2	9-1	2
TWO FLOORS 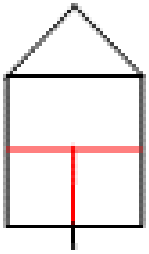	2-2x4	2-2	1	1-10	1	1-7	1
	2-2x6	3-2	2	2-9	2	2-5	2
	2-2x8	4-1	2	3-6	2	3-2	2
	2-2x10	4-11	2	4-3	2	3-10	3
	2-2x12	5-9	2	5-0	3	4-5	3
	3-2x8	5-1	2	4-5	2	3-11	2
	3-2x10	6-2	2	5-4	2	4-10	2
	3-2x12	7-2	2	6-3	2	5-7	3
	4-2x8	6-1	1	5-3	2	4-8	2
	4-2x10	7-2	2	6-2	2	5-6	2
	4-2x12	8-4	2	7-2	2	6-5	2

a. Spans are given in feet and inches.

b. Spans are based on minimum design properties for No.2 Grade Lumber of southern pine only. For other Species, See Table R502.5(1) 2012 NCRC

c. Building width is measured perpendicular to the ridge. For widths between those shown, spans are permitted to be interpolated.

d. NJ - Number of jack studs required to support each end. Where the number of required jack studs equals one, the header is permitted to be supported by an approved framing anchor attached to the full-height wall stud and to the header.

e. One half of the studs interrupted by a wall opening shall be placed immediately outside the jack studs on each side of the opening as king studs to resist wind loads. King studs shall extend the full height from sole plate to top plate of the wall.

Table R502.3.1(1)

FLOOR JOIST SPANS FOR COMMON LUMBER SPECIES

(Residential sleeping areas, live load = 30 psf, L./Δ =360)[a]

JOIST SPACING (inches)	SPECIES AND GRADE	DEAD LOAD = 10 psf			
		2x6	2X 8	2x10	2x12
		Maximum floor Joist spans			
		(ft.- in.)	(ft.- in.)	(ft.- In.)	(ft.- in.)
12	Southern pine SS	12-3	16-2	20-8	25-1
	Southern pine #1	11-10	15-7	19-10	24-2
	Southern pine #2	11-3	14-11	18-1	21-4
	Southern pine #3	9-2	11-6	14-0	16-6
	Spruce-pine- SS	11-7	15-3	19-5	23-7
	Spruce-pine- #1	11- 3	14-11	19- 0	23- 0
	Spruce-pine- #2	11- 3	14-11	19- 0	23- 0
	Spruce-pine- #3	9- 8	12- 4	15- 0	17- 5
16	Southern pine SS	11-2	14-8	18-9	22-10
	Southern pine #1	10- 9	14- 2	18- 0	21- 4
	Southern pine #2	10-3	13-3	15-8	18-6
	Southern pine #3	7-11	10-10	12-1	14-4
	Spruce-pine- SS	10-6	13-10	17-8	21-6
	Spruce-pine- #1	10-3	13-6	17-2	19-11
	Spruce-pine- #2	10- 3	13- 6	17- 2	19-11
	Spruce-pine- #3	8- 5	10- 8	13- 0	15- 1
19.2	Southern pine SS	10-6	13-10	17-8	21-6
	Southern pine #1	10-1	13-4	16-5	19-6
	Southern pine #2	9-6	12-1	14-4	16-10
	Southern pine #3	7-3	9-1	11-0	13-1
	Spruce-pine- SS	9-10	13-0	16-7	20-2
	Spruce-pine- #1	9-8	12-9	15-8	18-3
	Spruce-pine- #2	9-8	12-9	15-8	18-3
	Spruce-pine- #3	7-8	9-9	11-10	13-9
24	Southern pine SS	9-9	12-10	16-5	19-11
	Southern pine #1	9-4	12-4	14-8	17-5
	Southern pine #2	8-6	10-10	12-10	15-1
	Southern pine #3	6-5	8-2	9-10	11-8
	Spruce-pine- SS	9-2	12-1	15-5	18-9
	Spruce-pine- #1	8-11	11-6	14-1	16-3
	Spruce-pine- #2	8-11	11-6	14-1	16-3
	Spruce-pine- #3	6-10	8-8	10-7	12-4

a. Dead load limits for townhouses in Seismic Design Category C and all structures in Seismic Design Categories D_0, D_1, and D_2 shall be determined in accordance with Section R301.2.2.2.1.

Table R502.3.1(2)

FLOOR JOIST SPANS FOR COMMON LUMBER SPECIES

(Residential living areas, live load = 40 psf, L./Δ =360)[b]

JOIST SPACING (inches)	SPECIES AND GRADE		DEAD LOAD = 10 psf			
			2x6	2X 8	2x10	2x12
			Maximum floor Joist spans			
			(ft.- in.)	(ft.- in.)	(ft.- In.)	(ft.- in.)
12	Southern pine	SS	11-2	14-2	18-0	21-11
	Southern pine	#1	*10- 9*	*14- 2*	*18- 0*	21- 11
	Southern pine	#2	10-3	13-6	16-2	19-1
	Southern pine	#3	8-2	10-3	12-6	14-9
	Spruce-pine-fir	SS	10-6	13-10	17-8	21-6
	Spruce-pine-fir	#1	10-3	13-6	17-3	20-7
	Spruce-pine-fir	#2	10-3	13-6	17-3	20-7
	Spruce-pine-fir	#3	8-8	11-0	13-5	15-7
16	Southern pine	SS	10-2	13-4	17-0	20-9
	Southern pine	#1	9-9	12-10	16-1	19-1
	Southern pine	#2	9-4	11-10	14-0	16-6
	Southern pine	#3	7-1	8-11	10-10	12-10
	Spruce-pine-fir	SS	9-6	12-7	16-0	19-6
	Spruce-pine-fir	#1	9-4	12-3	15-5	17-10
	Spruce-pine-fir	#2	9-4	12-3	15-5	17-10
	Spruce-pine-fir	#3	7-6	9-6	11-8	13-6
19.2	Southern pine	SS	9-6	12-7	16-0	19-6
	Southern pine	#1	9-2	12-1	14-8	17-5
	Southern pine	#2	8-6	10-10	12-10	15-1
	Southern pine	#3	6-5	8-2	9-10	11-8
	Spruce-pine-fir	SS	9-0	11-10	15-1	18-4
	Spruce-pine-fir	#1	8-9	11-6	14-1	16-3
	Spruce-pine-fir	#2	8-9	11-6	14-1	16-3
	Spruce-pine-fir	#3	6-10	8-8	10-7	12-4
24	Southern pine	SS	8-10	11-8	14-11	18-1
	Southern pine	#1	8-6	11-3	13-1	15-7
	Southern pine	#2	7-7	9-8	11-5	13-6
	Southern pine	#3	5-9	7-3	8-10	10-5
	Spruce-pine-fir	SS	8-4	11-0	14-0	17-0
	Spruce-pine-fir	#1	8-1	10-3	12-7	14-7
	Spruce-pine-fir	#2	8-1	10-3	12-7	14-7
	Spruce-pine-fir	#3	6-2	7-9	9-6	11-0

a. End Bearing length shall be increased to 2 inches.

b. Dead load limits for townhouses in Seismic Design Category C and all structures in Seismic Design Categories D_0, D_1, and D_2 shall be determined in accordance with Section R301.2.2.2.1.

Table R502.3.3 (1)

CANTILEVER SPANS FOR FLOOR JOISTS SUPPORTING LIGHT-FRAME EXTERIOR BEARING WALL AND ROOF ONLY [a, b, c, f, g, h]

(Floor Live Load ≤ 40 psf, Roof Live Load ≤ 20 psf)

Member & Spacing	Maximum Cantilever Span (Uplift Force at Backspan Support in Lbs.) [d, e]		
	Ground Snow Load		
	≤ 20 psf		
	24 ft	32 ft	40 ft
2 X 8 @ 12"	20" (177)	15" (227)	—
2 X 10 @ 16"	29" (228)	21" (297)	16" (364)
2 X 10 @ 12"	36" (166)	26" (219)	20" (270)
2 X 12 @ 16"	—	32" (287)	25" (356)
2 X 12 @ 12"	—	42" (209)	31" (263)
2 X 12 @ 8"	—	48" (136)	45" (169)

For SI: 1 inch = 25.4 mm, 1 foot = 304.8 mm, 1 pound per square foot = 0.0479 kPa.

a. Tabulated values are for clear-span roof supported solely by exterior bearing walls.

b. Spans are based on minimum design properties for No. 2 Grade lumber of Douglas fir-larch, hem-fir, southern pine and spruce-pine-fir for repetitive (three or more) members. No. 1 or better grade lumber shall be used for southern pine.

c. Ratio of backspan to cantilever span shall be at least 3:1.

d. Connections capable of resisting the indicated uplift force shall be provided at the backspan support.

e. Uplift force is for a backspan to cantilever span ratio of 3:1. Tabulated uplift values are permitted to be reduced by multiplying by a factor equal to 3 divided by the actual backspan ratio provided (3/backspan ratio).

f. See Section R301.2.2.2.5, Item 1, for additional limitations on cantilevered floor joists for detached one- and two-family dwellings in Seismic Design Category D0, D1, or D2 and townhouses in Seismic Design Category C, D0, D1 or D2.

g. A full-depth rim joist shall be provided at the unsupported end of the cantilever joists. Solid blocking shall be provided at the supported end.

h. Linear interpolation shall be permitted for building widths and ground snow loads other than shown.

SEE PAGE 92 IN THIS BOOKLET FOR CANTILEVER INFORMATION FOR EXTERIOR WOOD DECKS USING #2 SYP

Table R502.3.3 (2)

CANTILEVER SPANS FOR FLOOR JOISTS SUPPORTING EXTERIOR BALCONY [a, b, e, f]

Member & Spacing	Maximum Cantilever Span (Uplift Force at Backspan Support in Lbs.) [c,d]
	Ground Snow Load
	≤ 30 psf
2 X 8 @ 12"	42" (139)
2 X 8 @ 16"	36" (151)
2 X 10 @ 12"	61' (164)
2 X 10 @ 16"	53" (180)
2 X 10 @ 24"	43" (212)
2 X 12 @ 16"	72" (228)
2 X 12 @ 24"	58" (279)

For SI: 1 inch = 25.4 mm, 1 pound per square foot = 0.0479 kPa.

a. Spans are based on minimum design properties for No. 2 Grade lumber of Douglas fir-larch, hem-fir, ~~southern pine~~ and spruce-pine-fir for repetitive (three or more) members. **No. 1 or better grade lumber shall be used for southern pine.**

b. Ratio of back span to cantilever span shall be at least 2:1.

c. Connections capable of resisting the indicated uplift force shall be provided at the back span support.

d. Uplift force is for a back span to cantilever span ratio of 2:1. Tabulated uplift values are permitted to be reduced by multiplying by a factor equal to 2 divided by the actual back span ratio provided (2/back span ratio).

e. A full-depth rim joist shall be provided at the unsupported end of the cantilever joists. Solid blocking shall be provided at the supported end.

f. Linear interpolation shall be permitted for ground snow loads other than shown.

Table R802.4 (1)

CEILING JOIST SPANS FOR COMMON LUMBER SPECIES

(Uninhabitable attics w/o storage, live load = 10 psf, L./Δ =240)

JOIST SPACING (inches)	SPECIES AND GRADE		DEAD LOAD = 5 psf			
			2x6	2X 8	2x10	2x12
			Maximum floor Joist spans			
			(ft.- in.)	(ft.- in.)	(ft.- In.)	(ft.- in.)
12	Southern pine	SS	12-11	20-3	Note a	Note a
	Southern pine	#1	12-5	19-6	25-8	Note a
	Southern pine	#2	11-10	18-8	24-7	Note a
	Southern pine	#3	10-1	14-11	18-9	22-9
	Spruce-pine-fir	SS	12-2	19-1	25-2	Note a
	Spruce-pine-fir	#1	11-10	18-8	24-7	Note a
	Spruce-pine-fir	#2	11-10	18-8	24-7	Note a
	Spruce-pine-fir	#3	10-10	15-10	20-1	24-6
16	Southern pine	SS	11-9	18-5	24-3	Note a
	Southern pine	#1	11-3	17-8	23-4	Note a
	Southern pine	#2	10-9	16-11	21-7	25-7
	Southern pine	#3	8-9	12-11	16-3	19-9
	Spruce-pine-fir	SS	11-0	17-4	22-10	Note a
	Spruce-pine-fir	#1	10-9	16-11	22-4	Note a
	Spruce-pine-fir	#2	10-9	16-11	22-4	Note a
	Spruce-pine-fir	#3	9-5	13-9	17-5	21-3
19.2	Southern pine	SS	11-0	17-4	22-10	Note a
	Southern pine	#1	10-7	16-8	22-0	Note a
	Southern pine	#2	10-2	15-7	19-8	23-5
	Southern pine	#3	8-0	11-9	14-10	18-0
	Spruce-pine-fir	SS	10-4	16-4	21-6	Note a
	Spruce-pine-fir	#1	10-2	15-11	21-0	25-8
	Spruce-pine-fir	#2	10-2	15-11	21-0	25-8
	Spruce-pine-fir	#3	8-7	12-6	15-10	19-5
24	Southern pine	SS	10-3	16-1	21-2	Note a
	Southern pine	#1	9-10	15-6	20-5	24-0
	Southern pine	#2	9-3	13-11	17-7	20-11
	Southern pine	#3	7-2	10-6	13-3	16-1
	Spruce-pine-fir	SS	9-8	15-2	19-11	25-5
	Spruce-pine-fir	#1	9-5	14-9	18-9	22-11
	Spruce-pine-fir	#2	9-5	14-9	18-9	22-11
	Spruce-pine-fir	#3	7-8	11-2	14-2	17-4

Check sources for availability of lumber in lengths greater than 20 feet.

For SI: 1 inch = 25.4 mm, 1 foot = 304.8 mm, 1 pound per square foot = 0.0479kPa.

a. **Span exceeds 26 feet in length.**

Table R802.4 (2)

CEILING JOIST SPANS FOR COMMON LUMBER SPECIES

(Uninhabitable attics w/LIMITED storage, live load = 20 psf, L /Δ =240)

JOIST SPACING (inches)	SPECIES AND GRADE		DEAD LOAD = 5 psf			
			2x6	2X 8	2x10	2x12
			Maximum floor Joist spans			
			(ft.- in.)	(ft.- in.)	(ft.- In.)	(ft.- in.)
12	Southern pine	SS	10-3	16-1	21-2	Note a
	Southern pine	#1	9-10	15-6	20-5	24-0
	Southern pine	#2	9-3	13-11	17-7	20-11
	Southern pine	#3	7-2	10-6	13-3	16-1
	Spruce-pine-fir	SS	9-8	15-2	19-11	25-5
	Spruce-pine-fir	#1	9-5	14-9	18-9	22-11
	Spruce-pine-fir	#2	9-5	14-9	18-9	22-11
	Spruce-pine-fir	#3	7-8	11-2	14-2	17-4
16	Southern pine	SS	9-4	14-7	19-3	24-7
	Southern pine	#1	8-11	14-0	17-9	20-9
	Southern pine	#2	8-0	12-0	15-3	18-1
	Southern pine	#3	6-2	9-2	11-6	14-0
	Spruce-pine-fir	SS	8-9	13-9	18-1	23-1
	Spruce-pine-fir	#1	8-7	12-10	16-3	19-10
	Spruce-pine-fir	#2	8-7	12-10	16-3	19-10
	Spruce-pine-fir	#3	6-8	9-8	12-4	15-0
19.2	Southern pine	SS	8-9	13-9	18-2	23-1
	Southern pine	#1	8-5	12-9	16-2	18-11
	Southern pine	#2	7-4	11-0	13-11	16-6
	Southern pine	#3	5-8	8-4	10-6	12-9
	Spruce-pine-fir	SS	8-3	12-11	17-1	21-8
	Spruce-pine-fir	#1	8-0	11-9	14-10	18-2
	Spruce-pine-fir	#2	8-0	11-9	14-10	18-2
	Spruce-pine-fir	#3	6-1	8-10	11-3	13-8
24	Southern pine	SS	8-1	12-9	16-10	21-6
	Southern pine	#1	7-8	11-5	14-6	16-11
	Southern pine	#2	6-7	9-10	12-6	14-9
	Southern pine	#3	5-1	7-5	9-5	11-5
	Spruce-pine-fir	SS	7-8	12-0	15-10	19-5
	Spruce-pine-fir	#1	7-2	10-6	13-3	16-3
	Spruce-pine-fir	#2	7-2	10-6	13-3	16-3
	Spruce-pine-fir	#3	5-5	7-11	10-0	12-3

Check sources for availability of lumber in lengths greater than 20 ft.

For SI: 1 inch = 25.4 mm, 1 foot = 304.8 mm, 1 pound per square foot = 0.0479kPa.

a. Span exceeds 26 feet in length

Table R802.5.1 (1)

RAFTER SPANS FOR COMMON LUMBER SPECIES

(ROOF live load = 20 psf, CEILING NOT ATTACHED TO RAFTERS, L /Δ =180)

JOIST SPACING (inches)	SPECIES AND GRADE	DEAD LOAD = 10 psf				
		2x4	2x6	2X 8	2x10	2x12
		Maximum Rafter Spans[a]				
		(ft.- in.)	(ft.- in.)	(ft.- in.)	(ft.- In.)	(ft.- in.)
12	Southern pine SS	11-3	17-8	23-4	Note b	Note b
	Southern pine #1	10-10	17-0	22-5	Note b	Note b
	Southern pine #2	10-4	15-7	19-8	23-5	Note b
	Southern pine #3	8-0	11-9	14-10	18-0	21-4
	Spruce-pine-fir SS	10-7	16-8	21-11	Note b	Note b
	Spruce-pine-fir #1	10-4	16-3	21-0	25-8	Note b
	Spruce-pine-fir #2	10-4	16-3	21-0	25-8	Note b
	Spruce-pine-fir #3	8-7	12-6	15-10	19-5	22-6
16	Southern pine SS	10-3	16-1	21-2	Note b	Note b
	Southern pine #1	9-10	15-6	19-10	23-2	Note b
	Southern pine #2	9-0	13-6	17-1	20-3	23-10
	Southern pine #3	6-11	10-2	12-10	15-7	18-6
	Spruce-pine-fir SS	9-8	15-2	1911	25-5	Note b
	Spruce-pine-fir #1	9-5	14-4	18-2	22-3	25-9
	Spruce-pine-fir #2	9-5	14-4	18-2	22-3	25-9
	Spruce-pine-fir #3	7-5	10-10	13-9	16-9	19-6
19.2	Southern pine SS	9-8	15-2	19-11	25-5	Note b
	Southern pine #1	9-3	14-3	18-1	21-2	25-2
	Southern pine #2	8-2	12-3	15-7	18-6	21-9
	Southern pine #3	6-4	9-4	11-9	14-3	16-10
	Spruce-pine-fir SS	9-1	14-3	18-9	23-11	Note b
	Spruce-pine-fir #1	8-10	13-1	16-7	20-3	23-6
	Spruce-pine-fir #2	8-10	13-1	16-7	20-3	23-6
	Spruce-pine-fir #3	6-9	9-11	12-7	15-4	17-9
24	Southern pine SS	8-11	14-1	18-6	23-8	Note b
	Southern pine #1	8-7	12-9	16-2	18-11	22-6
	Southern pine #2	7-4	11-0	13-11	16-6	19-6
	Southern pine #3	5-8	8-4	10-6	12-9	15-1
	Spruce-pine-fir SS	8-5	13-3	17-5	21-8	25-2
	Spruce-pine-fir #1	8-0	11-9	14-10	18-2	21-0
	Spruce-pine-fir #2	8-0	11-9	14-10	18-2	21-0
	Spruce-pine-fir #3	6-1	8-10	11-3	13-8	15-11

CONTINUED►

Table R802.5.1 (1)

RAFTER SPANS FOR COMMON LUMBER SPECIES

(ROOF live load = 20 psf, CEILING NOT ATTACHED TO RAFTERS, L /Δ =180)

Check sources for availability of lumber in lengths greater than 20 feet.

For SI: 1 inch = 25.4 mm, 1 foot = 304.8 mm, 1 pound per square foot = 0.0479 kPa.

a. The tabulated rafter spans assume that ceiling joists are located at the bottom of the attic space or that some other method of resisting the outward push of the rafters on the bearing walls, such as rafter ties, is provided at that location. When ceiling joists or rafter ties are located higher in the attic space, the rafter spans shall be multiplied by the factors given below:

HC/HR	Rafter Span Adjustment Factor
1/3	0.67
1/4	0.76
1/5	0.83
1/6	0.90
1/7.5 or less	1.00

where:

HC = Height of ceiling joists or rafter ties measured vertically above the top of the rafter support walls.

HR = Height of roof ridge measured vertically above the top of the rafter support walls.

b. **Span exceeds 26 feet in length.**

NOTES:_____

Table R802.5.1 (2)

RAFTER SPANS FOR COMMON LUMBER SPECIES

(ROOF Live Load = 20 psf, CEILING ATTACHED TO RAFTERS, L /Δ =240)

JOIST SPACING (inches)	SPECIES AND GRADE	DEAD LOAD = 10 psf				
		2x4	2x6	2X 8	2x10	2x12
		Maximum Rafter Spans[a]				
		(ft.- in.)	(ft.- in.)	(ft.- in.)	(ft.- In.)	(ft.- in.)
12	Southern pine SS	10-3	16-1	21-2	Note b	Note b
	Southern pine #1	9-10	15-6	20-5	Note b	Note b
	Southern pine #2	9-5	14-9	19-6	23-5	Note b
	Southern pine #3	8-0	11-9	14-10	18-0	21-4
	Spruce-pine- SS	9-8	15-2	19-11	25-5	Note b
	Spruce-pine- #1	9-5	14-9	19-6	24-10	Note b
	Spruce-pine- #2	9-5	14-9	19-6	24-10	Note b
	Spruce-pine- #3	8-7	12-6	15-10	19-5	22-6
16	Southern pine SS	9-4	14-7	19-3	24-7	Note b
	Southern pine #1	8-11	14-1	18-6	23-2	Note b
	Southern pine #2	8-7	13-5	17-1	20-3	23-10
	Southern pine #3	6-11	10-2	12-10	15-7	18-6
	Spruce-pine- SS	8-9	13-9	18-1	23-1	Note b
	Spruce-pine- #1	8-7	13-5	17-9	22-3	25-9
	Spruce-pine- #2	8-7	13-5	17-9	22-3	25-9
	Spruce-pine- #3	7-5	10-10	13-9	16-9	19-6
19.2	Southern pine SS	8-9	13-9	18-2	23-1	Note b
	Southern pine #1	8-5	13-3	17-5	21-2	25-2
	Southern pine #2	8-1	12-3	15-7	18-6	21-9
	Southern pine #3	6-4	9-4	11-9	14-3	16-10
	Spruce-pine- SS	8-3	12-11	17-1	21-9	Note b
	Spruce-pine- #1	8-1	12-8	16-7	20-3	23-6
	Spruce-pine- #2	8-1	12-8	16-7	20-3	23-6
	Spruce-pine- #3	6-9	9-11	12-7	15-4	17-9
24	Southern pine SS	8-1	12-9	16-10	21-6	Note b
	Southern pine #1	7-10	12-3	16-2	18-11	22-6
	Southern pine #2	7-4	11-10	13-11	16-6	19-6
	Southern pine #3	5-8	8-4	10-6	12-9	15-1
	Spruce-pine- SS	7-8	12-0	15-10	20-2	24-7
	Spruce-pine- #1	7-6	11-9	14-10	18-2	21-0
	Spruce-pine- #2	7-6	11-9	14-10	18-2	21-0
	Spruce-pine- #3	6-1	8-10	11-3	13-8	15-11

CONTINUED►

Table R802.5.1 (1)

RAFTER SPANS FOR COMMON LUMBER SPECIES

(ROOF live load = 20 psf, CEILING NOT ATTACHED TO RAFTERS, L /Δ =240)

Check sources for availability of lumber in lengths greater than 20 feet.

For SI: 1 inch = 25.4 mm, 1 foot = 304.8 mm, 1 pound per square foot = 0.0479 kPa.

a. The tabulated rafter spans assume that ceiling joists are located at the bottom of the attic space or that some other method of resisting the outward push of the rafters on the bearing walls, such as rafter ties, is provided at that location. When ceiling joists or rafter ties are located higher in the attic space, the rafter spans shall be multiplied by the factors given below:

HC/HR	Rafter Span Adjustment Factor
1/3	0.67
1/4	0.76
1/5	0.83
1/6	0.90
1/7.5 or less	1.00

where:

HC = Height of ceiling joists or rafter ties measured vertically above the top of the rafter support walls.

HR = Height of roof ridge measured vertically above the top of the rafter support walls.

b. Span exceeds 26 feet in length.

NOTES:_____

ROOF DOWN BRACING

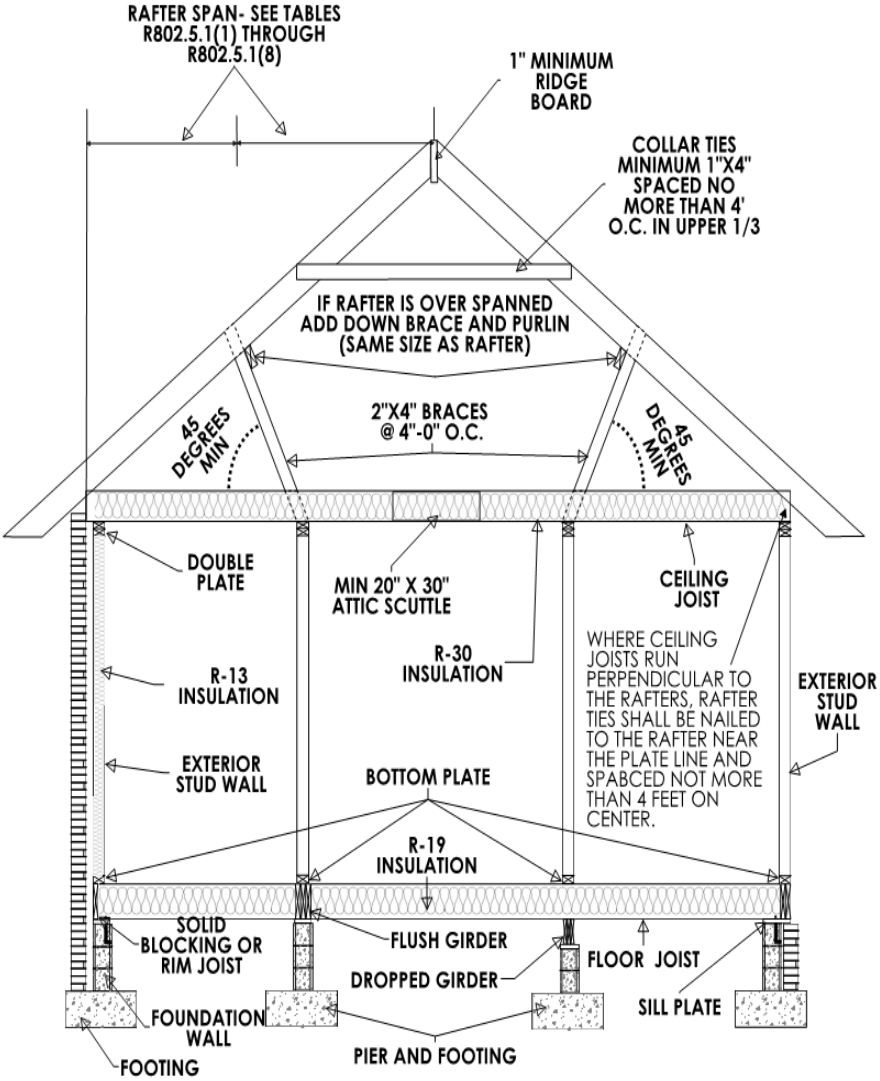

NOTES:

PURLINS MAY BE INSTALLED TO REDUCE THE SPAN OF RAFTERS. PURLINS SHALL BE SIZED NO LESS THAN THE REQUIRED SIZE OF RAFTERS THEY SUPPORT. PURLINS SHALL BE SUPPORTED BY 2X4 STRUTS INSTALLED TO BEARING WALLS AT A SLOPED NOT LESS THAN 45 DEGREES FROM HORIZONTAL. THE STRUTS SHALL BE SPACED NOT MORE THAN 4'-0" O.C., AND THE UNBRACED LENGTH OF STRUTS SHALL NOT EXCEED 5"-0". COLLAR TIES SHALL BE NAILED IN THE UPPER THIRD OF THE ROOF TO EVERY THIRD PAIR OF RAFTERS NOT TO EXCEED 4'-0" O.C.

STAIRWAYS

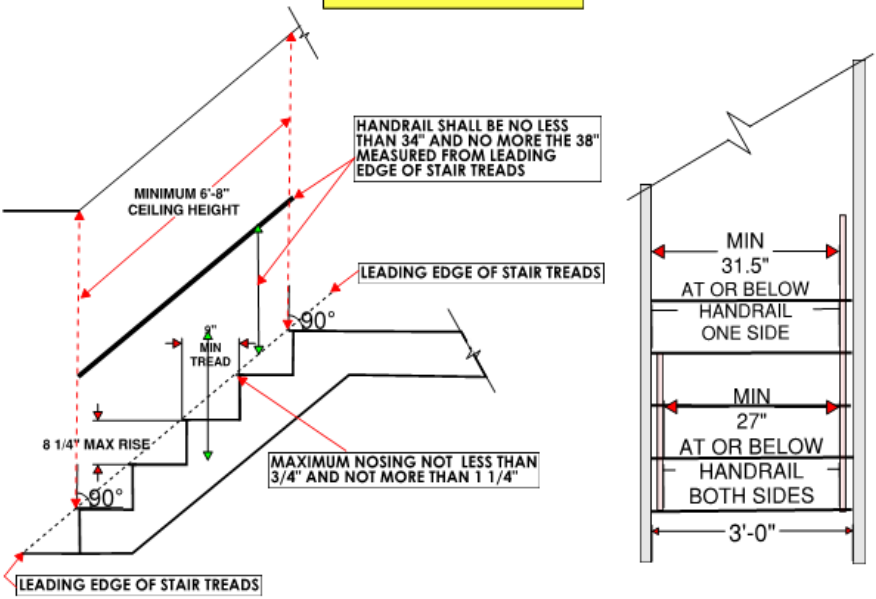

R311.7.1Width. Stairways **shall not be less than 36 inches** (914 mm) in clear width at all points above the permitted handrail height and below the required headroom height. Handrails shall not project more than **4.5 inches** (114 mm) on either side of the stairway and the minimum clear width of the stairway at and below the handrail height, including treads and landings, shall not be less than **31-1/2 inches** (787mm) where a handrail is installed on one side and **27 inches** (698 mm) where handrails are provided on both sides. **Exception:** Spiral stairways shall be in accordance with Section R311.7.9.1.

R311.7.2 Headroom. The minimum + the sloped line adjoining the tread nosing or from the floor surface of the landing or platform on that portion of the stairway.

> **Exception:** Where the nosing of treads at the side of a flight extend under the edge of a floor opening through which the stair passes, the floor opening shall be allowed to project horizontally into the required headroom a maximum of **4-3/4 inches** (121 mm).

R311.7.4.1 Riser height. The maximum riser height shall be **8-1/4** inches (210 mm). Measured vertically between leading edges of the adjacent treads. Greatest riser height shall not exceed the smallest by more than **3/8 inch** (9.5mm). The top and bottom riser of interior stairs shall not exceed the smallest riser within that stair run by more than **3/4 inch** (19 mm). The height of the top and bottom riser of the interior stairs shall be measured from the permanent finished surface (carpet excluded). Where the bottom riser of an exterior stair adjoins an exterior walk, porch, driveway, patio, garage floor, or finish grade, the height of the riser may be less than the height of the adjacent risers.

R311.7.4.2 Tread depth. Minimum tread depth shall be **9 inches** (229 mm). Measured horizontally between the vertical planes of the foremost projection of adjacent treads and at a right angle to the tread's leading edge. The greatest tread depth shall not exceed the smallest by more than **3/8 inch** (9.5 mm). **FOR WINDER TREADS REFER TO 2012 NCRC**

R311.7.4.3 Profile. The radius of curvature at the nosing shall be no greater than 9/16 inch (14 mm). A nosing not less than 3/4 inch but not more than **1-1/4 inches** shall be provided on stairways with solid risers. The greatest nosing projection shall not exceed the smallest nosing projection by more than **3/8 inch** (9.5 mm) between two stories, including the nosing at the level of floors and landings. Beveling of nosing shall not exceed **1/2 inch** (12.7 mm). Risers shall be vertical or sloped under the tread above from the underside of the nosing above at an angle not more than **30 degrees** (0.51 rad) from the vertical. Open risers are permitted, provided that the opening between treads does not permit the passage of a **4-inch diameter** (102 mm) sphere.

Exceptions:

1. A nosing is not required where the tread depth is a minimum of **11 inches** (279 mm).
2. The opening between adjacent treads is not limited on stairs with a total rise of **30 inches** (762 mm) or less.

Fireblocking, Draftstopping or Firestopping

People in the building industry believe these terms to be interchangeable, and / or to be one and the same. However, their use and purpose is very different.

1. Fireblock is a material whose main purpose is to be used in concealed locations of combustible construction to prevent fire from quickly spreading through these spaces. Such a material will, as an inherent characteristic, also slow the migration of smoke throughout the building. Fireblock is typically applied in a horizontal position to prevent the spread of fire (and thus air) in a vertical manner.

2. Draftstop is a material whose main purpose is to be used in concealed locations of combustible construction to prevent the movement of slow air (oxygen) within open or concealed areas Similar to firestopping, such a material will, as an inherent characteristic, also slow the migration of smoke throughout the building. Draftstopping is typically applied in a vertical position to prevent the spread of air in a horizontal manner (think compartmentation), within concealed spaces such as attics, crawlspaces, floor-ceiling and/or roof-ceiling assemblies.

3. Firestop material is tested and approved for use in a specific construction detail that reflects the installed assembly, meant to protect rated penetrations by pipe, wire, etc., to the same degree as the fire-rated wall, ceiling or floor that is being penetrated.

What are acceptable fire blocking materials?

Types of material used as fireblock.

As per 2012 North Carolina Residential Code (NCRC), Section R302.11 [R602.8] Fireblocking shall consist of:

a. Two-inch (51mm) nominal lumber.

b. Two thicknesses of 1-inch (25.4mm) nominal lumber with broken lap joints.

c. One thickness of 23/32-inch (18.3 mm) wood structural panels with joints backed by 23/32-inch (18.3 mm) wood structural panels.

d. One thickness of 3/4-inch (19.1 mm) particleboard with joints backed by 3/4-inch (19.1 mm) particleboard.

e. One-half inch (12.7 mm) gypsum board.

f. One-quarter inch (6.4 mm) cement-based millboard.

g. Batts or blankets of mineral wool or glass fiber or other approved materials installed in such a manner as to be securely retained in place.

R1003.19 Chimney Fire Blocking Wood fire blocking materials or other combustible items cannot be used up against chimneys regardless of the thickness.

Examples of where Fireblocking is used.

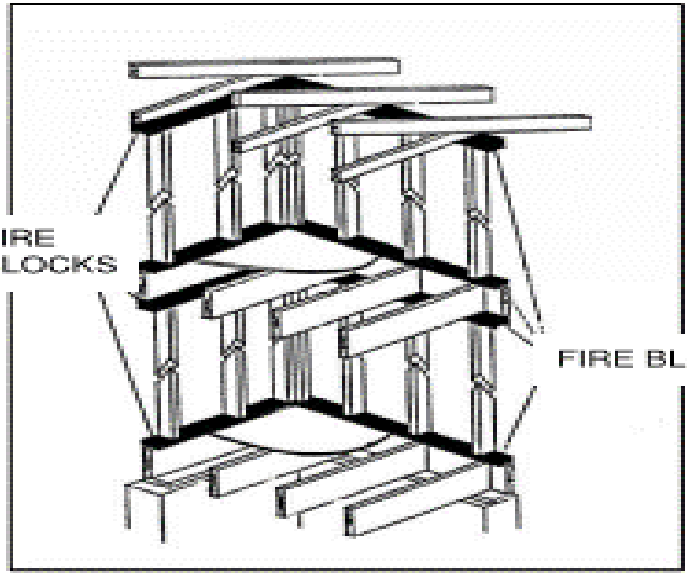

Figure 2- Fireblock

a. Separate open vertical spaces from open horizontal spaces, (Figure 2)

b. The top and bottom of stairs, between stringers,

c. Within architectural trim, such as furred out wall finishes, wainscoting, soffits, siding, DOI File # WP-060-11 Fireblocking Page 3 of 7 etc., (**Figure 3**).

d. Sleeper spaces, such as a raised floor,

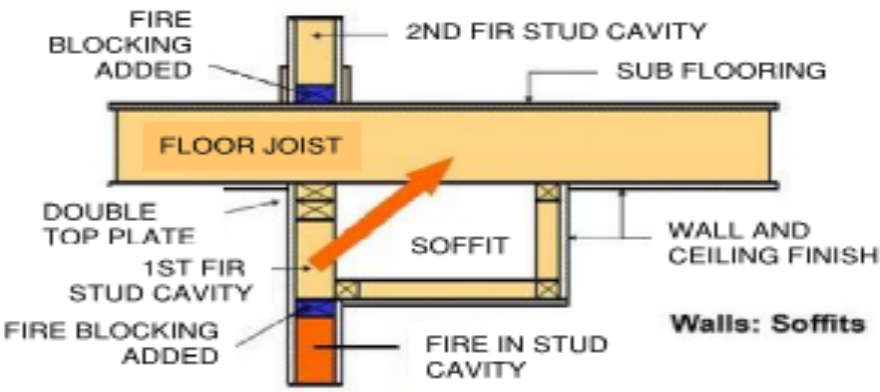

Figure 3– Fireblock at Soffits

e. Fill in spaces at floor and/or ceiling in fire-partitions constructed of combustible materials,

f. Unrated membrane penetrations, such as when a hole for a pipe or duct is cut out too large to be filled properly with firestop material, the excess area can be filled with non-combustible fireblock, and then the annular area around the pipe/duct is filled with firestop material. (FIGURE 4)

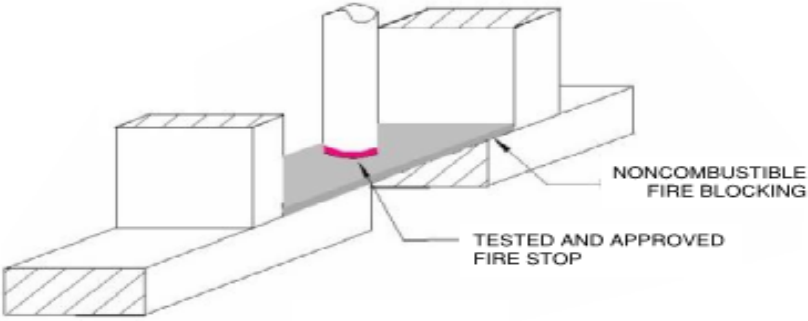

Figure 4 - Membrane Firestop with non-combustible fireblocking

T and F Ratings: What are T and F ratings?

T and F ratings are not applicable to Fireblock products; they apply only to Firestop products, which are tested to resist the passage of fire traditionally around penetrating items such as pipes or wires. Their definitions can be found in the NC Building Codes and are reprinted below.

A. F RATING. The time period that the through-penetration firestop system limits the spread of fire through the penetration when tested in accordance with ASTM E 814 or UL 1479.

B. T RATING. The time period that the penetration firestop system, including the penetrating item, limits the maximum temperature rise to 325°F (163°C) above its initial temperature through the penetration on the non-fire side when tested in accordance with ASTM E 814 or UL 1479.

C. THROUGH-PENETRATION FIRESTOP SYSTEM. An assemblage of specific materials or products that are designed, tested and fire-resistance rated to resist for a prescribed period of time the spread of fire through penetrations. The F and T rating criteria for penetration firestop systems shall be in accordance with ASTM E 814 or UL 1479. See definitions of "F rating" and "T rating."

NOTES:

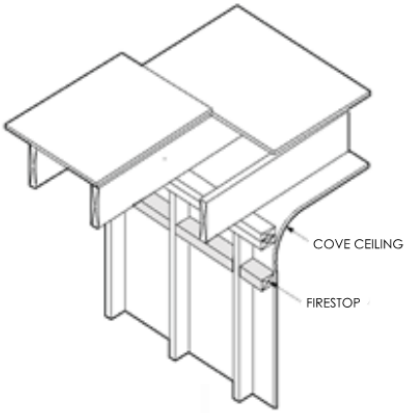

FIRESTOPPING–COVE CEILING

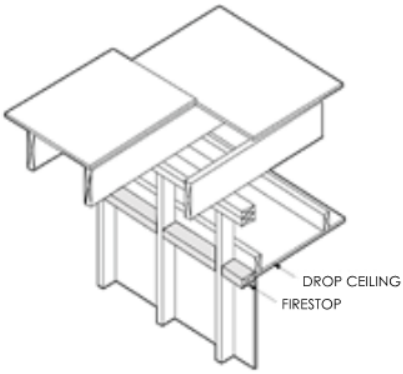

FIRESTOPPING–DROPPED CEILING

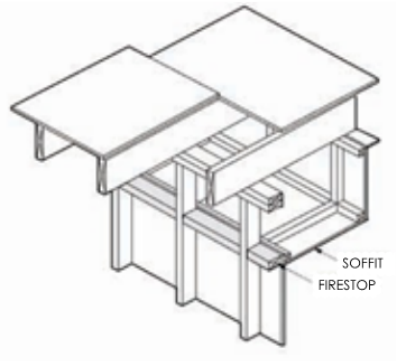

FIRESTOPPING-FURRED SOFFIT

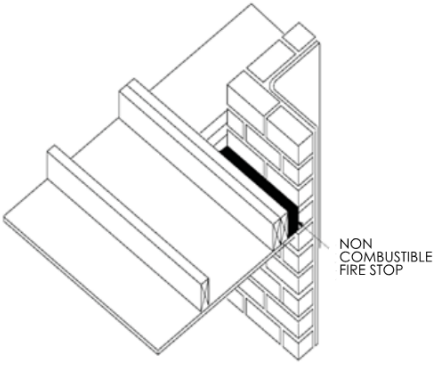

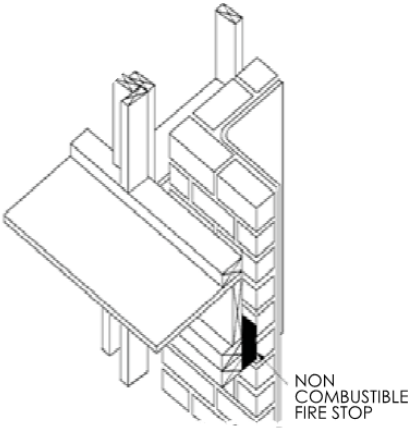

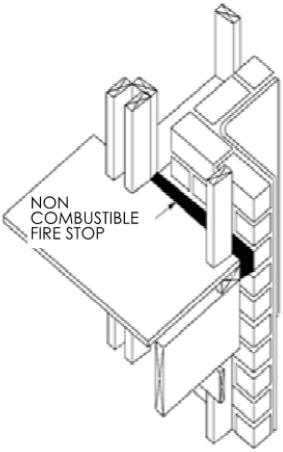

Glazing 01/2015

R308.4 Hazardous locations. The following shall be considered specific hazardous locations for the purposes of glazing:

1. Glazing in all fixed and operable panels of swinging, sliding and bi-fold doors.

EXCEPTIONS:

1. Glazed openings of a size through which a 3-inch diameter (76 mm) sphere is unable to pass.
2. Decorative glazing.

2. Glazing in an individual fixed or operable panel ~~adjacent to a~~ in the same plane as the door where the nearest vertical edge is within 24-inches (610 mm) of the door in a closed position and whose bottom edge is less than 60 inches (1524 mm) above the floor or walking surface.

EXCEPTIONS:

1. Decorative glazing.
2. When there is an intervening wall or other permanent barrier between the door and the glazing.
3. Glazing in walls on the latch side of and perpendicular to the plane of the door in a closed position. Deleted.
4. Glazing adjacent to a door where access through the door is to a closet or storage area 3 feet (914 mm) or less in depth.
5. Glazing that is adjacent to the fixed panel of patio doors.

3. Glazing in an individual fixed or operable panel that meets all of the following conditions:

3.1 The exposed area of an individual pane is **larger than 9 square** feet (0.836 m2); and

3.2 The **bottom edge** of the glazing is **less than 18 inches** (457 mm) above the floor; and

3.3 The **top edge** of the glazing is **more than 36 inches** (914 mm) above the floor; and

3.4 One or more walking surfaces are within 36 inches (914 mm), measured horizontally and in a straight line, of the glazing.

EXCEPTIONS:

1. Decorative glazing.
2. When a horizontal rail is installed on the accessible side(s) of the glazing 34 to 38 inches (864 to 965) above the walking surface. The rail shall be capable of withstanding a horizontal load of 50 pounds per linear foot (730 N/m) without contacting the glass and be a minimum of 1-1/2 inches (38 mm) in cross sectional height.
3. Outboard panes in insulating glass units and other multiple glazed panels when the bottom edge of the glass is 25 feet (7620 mm) or more above grade, a roof, walking surfaces or other horizontal [within 45 degrees (0.79 rad) of horizontal] surface adjacent to the glass exterior.
4. **All glazing in railings** regardless of area or height above a walking surface. Included are structural baluster panels and nonstructural infill panels.
5. Glazing in enclosures for or walls facing hot tubs, whirlpools, saunas, steam rooms, bathtubs and showers, where the bottom exposed edge of the glazing is less than 60 inches (1524 mm) measured vertically above any standing or walking surface.

   Exception: Glazing that is more than 60 inches (1524 mm), measured horizontally and in a straight line, from the water's edge of a hot tub, whirlpool or bathtub.

6. Glazing in walls and fences adjacent to indoor and outdoor swimming pools, hot tubs and spas where the bottom edge of the glazing is less than 60 inches (1524

mm) above a walking surface and within 60 inches (1524 mm), measured horizontally and in a straight line, of the water's edge. This shall apply to single glazing and all panes in multiple glazing.

7. Glazing adjacent to stairways, landings and ramps within 36 inches (914 mm) horizontally of a walking surface when the exposed surface of the glazing is less than 60 inches (1524 mm) above the plane of the adjacent walking surface.

   Exceptions:

   1. When a rail is installed on the accessible side(s) of the glazing 34 to 38 inches (864 to 965 mm) above the walking surface. The rail shall be capable of withstanding a horizontal load of 50 pounds per linear foot (730 N/m) without contacting the glass and be a minimum of 1-1/2 inches (38 mm) in cross sectional height.
   2. The side of the stairway has a guardrail or handrail, including balusters or in-fill panels, complying with Sections R311.7.7 and R312 and the plane of the glazing is more than 18 inches (457 mm) from the railing; or
   3. When a solid wall or panel extends from the plane of the adjacent walking surface to 34 inches (863 mm) to 36 inches (914 mm) above the walking surface and the construction at the top of that wall or panel is capable of withstanding the same horizontal load as a guard.

8. Glazing adjacent to stairways within 60 inches (1524 mm) horizontally of the bottom tread of a stairway in ~~any~~ the direction of travel when the exposed surface of the glazing is less than 60 inches (1524 mm) above the nose of the tread.

Exceptions: Deleted.

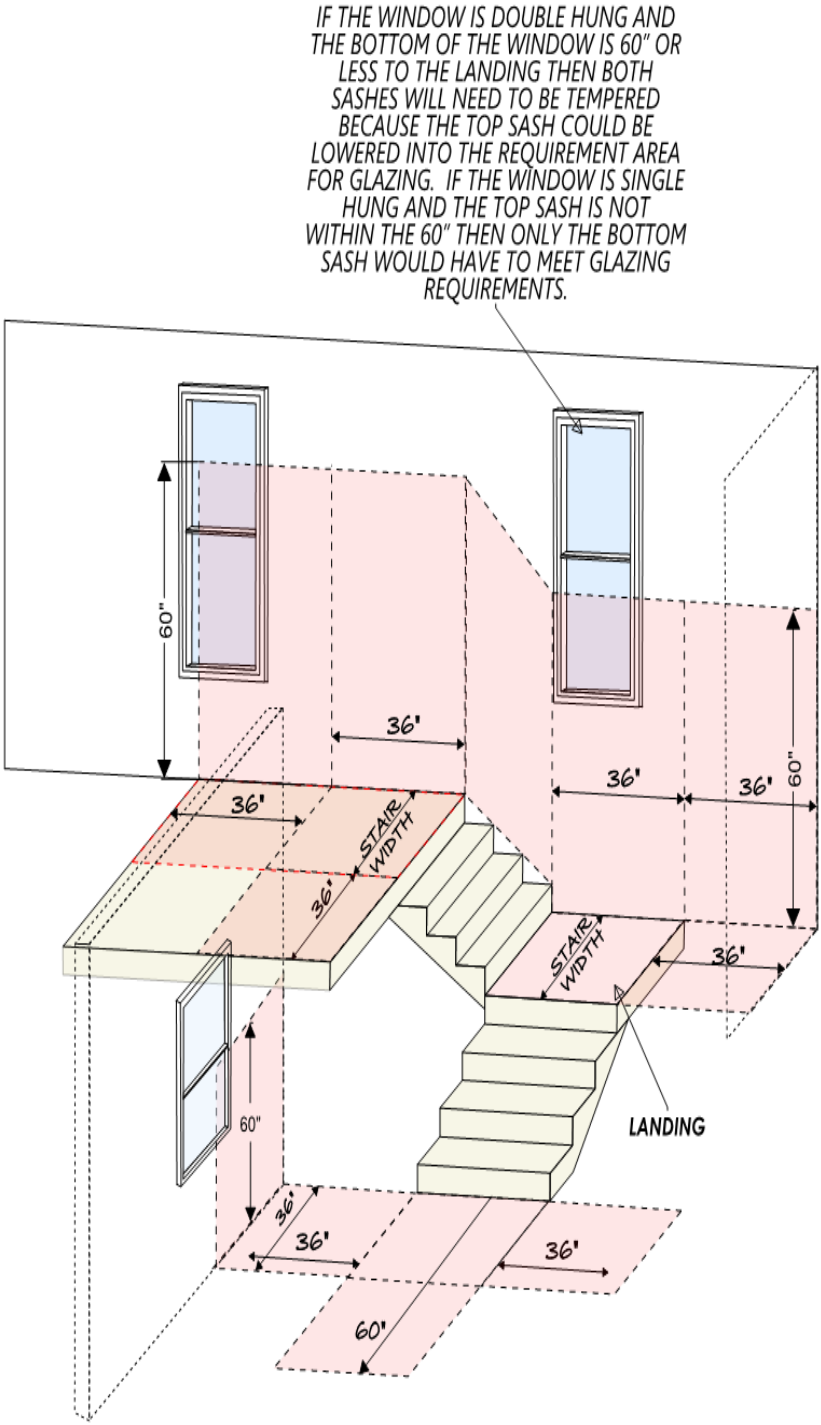

TEMPERED GLAZING LOCATIONS

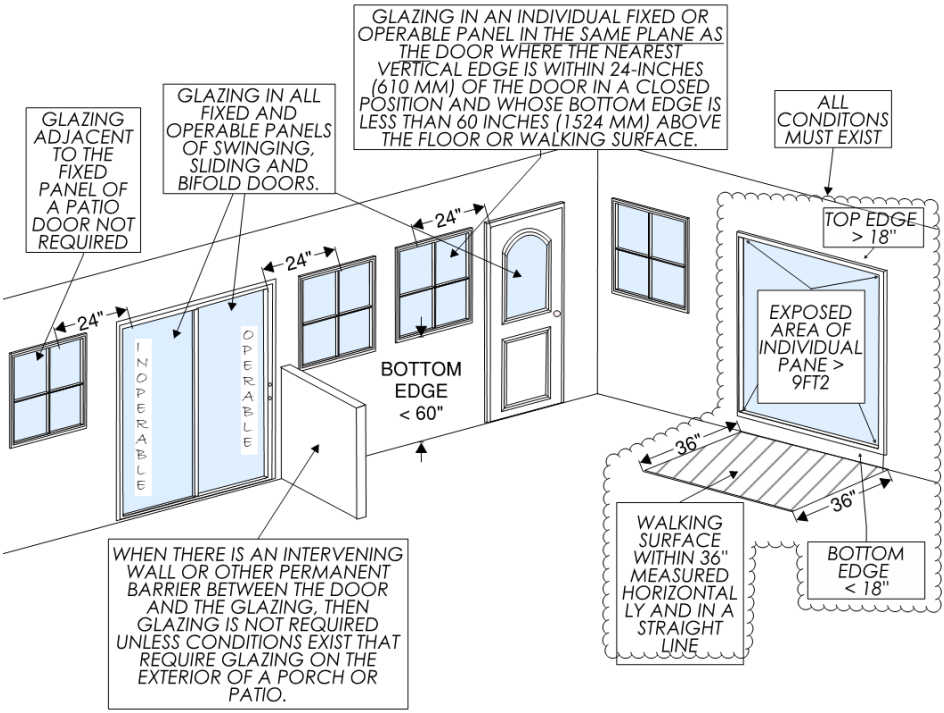

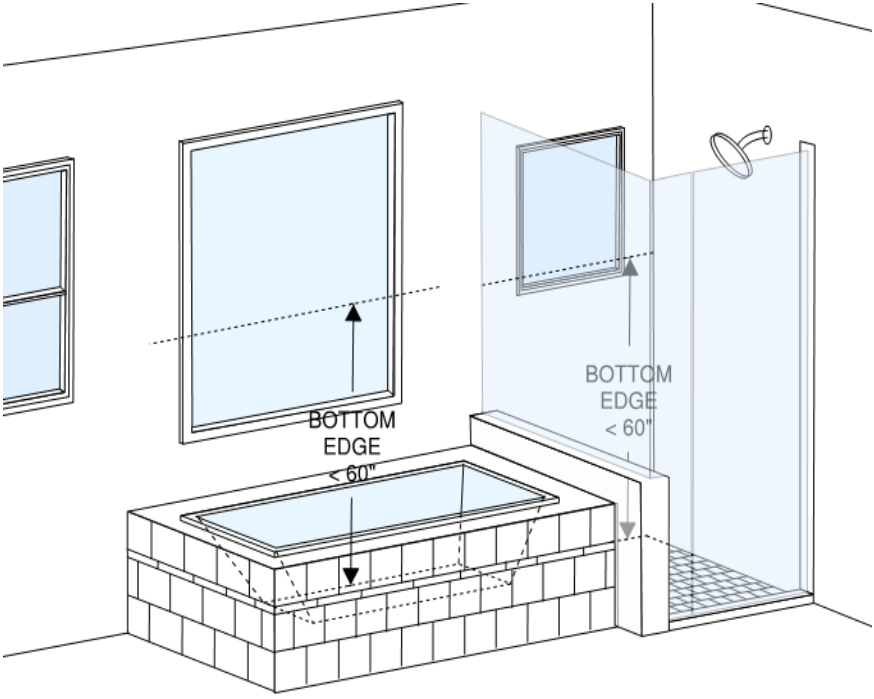

TEMPERED GLAZING LOCATIONS

SKYLIGHTS AND SLOPED GLAZING R308.6

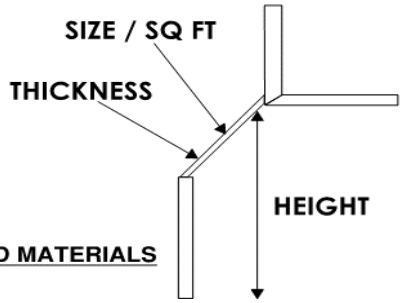

PERMITTED MATERIALS

1. GLASS AREA 16 SQ FT OR LESS LAMINATED GLASS WITH A MINIMUM 0.015-INCH (0.38MM) POLYVINYL BUTYRAL INTERLAYER, HIGHEST POINT OF GLASS NOT MORE THAN 12 FT ABOVE A WALKING SURFACE OR OTHER ACCESSIBLE AREA. THE MINIMUM INTERLAYER THICKNESS SHALL BE 0.030 INCH (0.76 MM).

   FOR HIGHER OR LARGER SIZES, THE MINIMUM INTERLAYER THICKNESS SHALL BE 0.030 INCH (0.76MM)

2. FULLY TEMPERED GLASS
3. HEAT-STRENGTHENED GLASS
4. WIRED GLASS
5. APPROVED RIGID PLASTICS.

R308.6.3 Screens, general. For fully tempered or heat-strengthened glass, a retaining screen meeting the requirements of Section R308.6.7 shall be installed below the glass, except for fully tempered glass that meets either condition listed in Section R308.6.5.

R308.6.4 Screens with multiple glazing. When the inboard pane is fully tempered, heat-strengthened or wired glass, a retaining screen meeting the requirements of Section R308.6.7 shall be installed below the glass, except for either condition listed in Section R308.6.5. All other panes in the multiple glazing may be of any type listed in Section R308.6.2.

R308.6.5 Screens not required. Screens shall not be required when fully tempered glass is used as single glazing or the inboard pane in multiple glazing and either of the following conditions are met:

1. Glass area 16 square feet (1.49 m2) or less. Highest point of glass not more than 12 feet (3658 mm) above a walking surface or other accessible area, nominal glass thickness not more than 3/16 inch (4.8 mm), and (for multiple glazing only) the other pane or panes fully tempered, laminated or wired glass.

2. Glass area greater than 16 square feet (1.49m2). Glass sloped 30 degrees (0.52 rad) or less from vertical, and highest point of glass not more than 10 feet (3048 mm) above a walking surface or other accessible area.

INSULATION

1. When is an insulation inspection required?

NCACP Section 107.1.6 Insulation inspections shall be made after an approved building framing and rough-in inspection and after the permanent roof covering is installed, with all insulation and vapor retarders in place, but before any wall or ceiling covering is applied.

2. What are the minimum R-values required for walls, floors and ceilings?

Table N1102.1 Insulation shall be a minimum of R-13 in walls, R-30 in ceilings and R-19 in floors. This is for zone 3 which is Mecklenburg County.

3. What is the maximum slope a ceiling can be before blown insulation cannot be used?

Typically, manufacturer's information discourages using blown insulation for sloped ceilings. Insulation batts must be used. Blown insulation can only be used for flat ceilings unless specified for sloped ceilings by the manufacturer.

4. Are insulation markers necessary when using blown insulation in the attic?

Section N1101.3.1 Yes, where blown-in or sprayed insulation is applied in the roof-ceiling assembly, the installer shall provide a certification of the initial installed thickness, settled thickness, coverage area, and number of bags of insulating material installed. Markers shall be provided for every 300 square feet of attic area, attached to the trusses, rafters, or joists and indicate in 1-inch high numbers the installed thickness of the insulation. The depth markers shall be installed to the roof-ceiling assembly at time of wall insulation and be viewable at the insulation inspection along with the baffles.

FINAL INSPECTION

1. When is a final inspection required?

NCACP Section 107.1.8 Final inspections shall be made for each trade after completion of the work authorized under the technical codes.

2. Is a separation required between the garage and the living area?

Section R302.6 Dwelling/garage fire separation. The garage shall be separated as required by Table R302.6.(BELOW) Openings in garage walls shall comply with Section R302.5. This provision does not apply to garage walls that are perpendicular to the adjacent *dwelling unit* wall.

R302.7 Under-stair protection. Enclosed accessible space under stairs shall have walls, under-stair surface and any soffits protected on the enclosed side with 1/2-inch (12.7 mm) gypsum board.

TABLE R302.6
DWELLING / GARAGE SEPARATION

SEPERATION	MATERIAL
From the residence and attics	Not less than 1/2-inch gypsum board or equivalent applied to the garage side
From all habitable rooms above the garage	Not less than 5/8-inch Type X gypsum board or equivalent
Structure(s) supporting floor/ceiling assemblies used for separation required by this section	Not less than 1/2-inch gypsum board or equivalent
Garages located less than 3 feet from a dwelling unit on the same lot	Not less than 1/2-inch gypsum board or equivalent applied to the interior side of exterior walls that are within this area

For SI: 1 inch = 25.4 mm, 1 foot = 304.8 mm.

3. How much can a handrail project into the stairway?

Section R311.7 Stairways shall not be less than 36 inches in clear width at all points above the permitted handrail height and below the required headroom height. Handrails shall not project more than 4.5 inches on either side of the stairway. The minimum clear width of the stairway at and below the handrail height, including treads and landings, shall not be less than 31.5 inches where a handrail is installed on one side and 27 inches where handrails are provided on both sides. **SEE PAGE 71 OF THIS BOOKLET FOR ILLUSTRATION.**

4. How many risers are needed before a handrail is required?

Section R311.7.7 A handrail shall be provided on at least one side of stairway if it has (4) four or more risers.

Section R312.1 If the stairway is more than 30 inches above grade, then **handrail and guardrails** are required. If the stairway is open on both sides, then handrail and guardrail would be required on both sides.

Section R311.7.7.3 Exterior handrails (Decks, garages, and areas exposed to weather) shall not be more than 3-1/2 inches in cross section dimension.

5. Are returns at the end of handrails required on all handrails?

Section R311.7.7.2 Continuity. Handrails for stairways shall be continuous for the full length of the flight, from a point directly above the top riser of the flight to a point directly above the lowest riser of the flight. Handrail ends shall be returned or shall terminate in newel posts or safety terminals. Handrails adjacent to a wall shall have a space of not less than 1-1/2 inch (38 mm) between the wall and the handrails.

EXCEPTIONS:

1. Handrails shall be permitted to be interrupted by a newel post.
2. The use of a volute, turnout, starting easing or starting newel shall be allowed over the lowest tread.

3. Two or more separate rails shall be considered continuous if the termination of the rails occurs within 6 inches (152 mm) of each other. If transitioning between a wall-mounted handrail and a guardrail/handrail, the wall-mounted rail must return into the wall.

6. Are foundation drains allowed to terminate outside the foundation wall underground?

Section R405.2.3 The drainage system shall discharge into an approved sewer system or to daylight.

7. Is regular gypsum board acceptable material at shower and bath areas?

Section R702.3.8 & R307.2 Gypsum board utilized as the base or backer board for adhesive application of ceramic tile or other nonabsorbent finish material shall conform to ASTM C630 or C1178. Bathtub and shower floors and walls above bathtubs with installed shower heads and in shower compartments shall be finished with a nonabsorbent surface. Such wall surfaces shall extend to a height of not less than 6 feet above the floor.

8. What is an acceptable location for the insulation certificate?

Section N1101.9 Certificate. A permanent certificate shall be posted on or in the electrical distribution panel, in the attic next to the attic insulation card, or inside a kitchen cabinet or other approved location. The certificate shall not cover or obstruct the visibility of the circuit directory label, service disconnect label or other required labels. The builder, permit holder, or registered design professional shall be responsible for completing the certificate. The certificate shall list the predominant *R*-values of insulation installed in or on ceiling/roof, walls, foundation (slab, *basement wall,* crawlspace wall and floor) and duct outside conditioned spaces; *U*-factors for fenestration and the solar heat gain coefficient (SHGC) of fenestration. Where there is more than one value for each component, the certificate shall list the value covering the

largest area. The certificate shall indicate whether the building air leakage was visually inspected as required in Section N1102.4.2.1 or provide results of the air leakage testing required in Section N1102.4.2.2 The certificate shall provide results of duct leakage test required in Section N1102.4.2.2. Appendix E-1 contains a sample certificate.

9. **What are the more common items that inspectors look at for the Final Inspection?**

1. Blown insulation is completed with a blown insulation certificate card posted in the attic
2. Pull down stairs are installed per manufacturers' requirements
3. Glass shower enclosures are complete and the required tempered stamp present
4. Wall rails and banisters are properly installed
5. Garage area is properly fire stopped
6. All exterior penetrations are sealed
7. All exterior wood has at least a prime coat of paint
8. House numbers are installed
9. Final grading has positive drainage away from the residence

NOTES:_____

EXTERIOR WOOD DECKS

1. **A deck is an exposed exterior wood floor structure which may be attached to the structure or freestanding. Roofed porches (open or screened-in) may be constructed using these provisions.**
2. **Support posts shall be supported by a footing.**

FOOTING CHART

TABLE AM102.1 FOOTING TABLE, [a, b, c]				
SIZE (inches)		**TRIBUTARY AREA (square feet)**	**THICKNESS (inches)**	
Precast Footings A X A	**Cast-in-Place Footings B X C**		**Precast**	**Cast-in-Place**
8 X 16	**8 X 16**	**36**	**4**	**6**
12 X 12	**12 X 12**	**40**	**4**	**6**
16 X 16	**16 X 16**	**70**	**8**	**8**
___	**16 X 24**	**100**	___	**8**
___	**24 X 24**	**150**	___	**8**

For SI: 1 inch = 25.4 mm, 1 square foot = 0.0929m2.

a. Footing values are based on single floor and roof loads

b. Support post must rest in center 1/3 of footer

c. Top of footer shall be level for full bearing support of post

NOTES:_____

_____

_____

_____

_____

_____

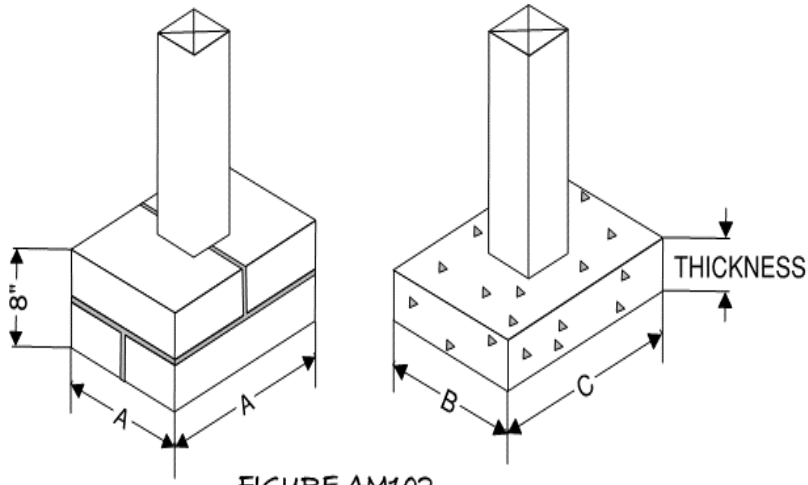

FIGURE AM102

Note: Tributary area of shaded section on free standing deck shown is 5′ X 6′ = 30 sq. ft. Code will require a minimum footer of 8″ X 16″ per Table AM102.1. (SEE PAGE 88)

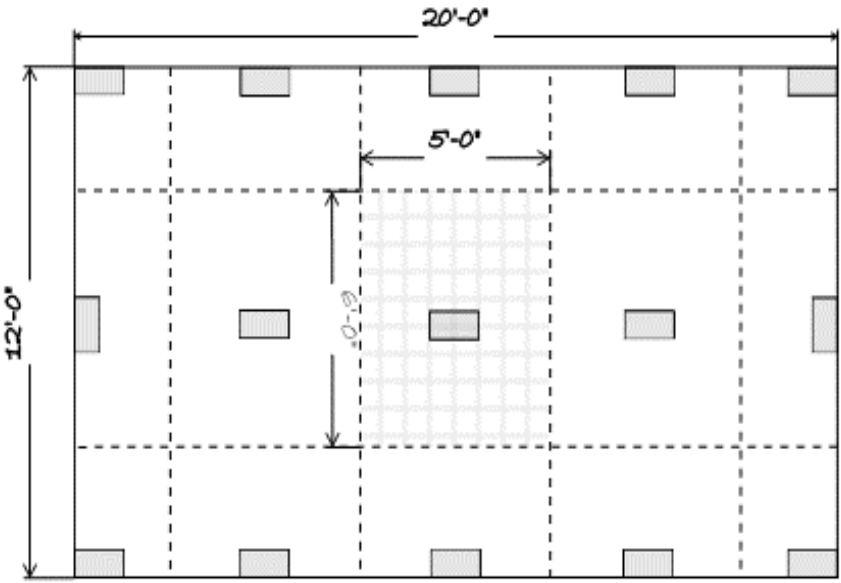

NOTES:_____

FLASHING

AM103.1 When attached to a structure, the structure to which attached shall have a treated wood band for the length of the deck, **OR** corrosion-resistant flashing shall be used to prevent moisture from coming in contact with the untreated framing of the structure. **Aluminum flashing shall not be used** in conjunction with deck construction. The deck band and the structure band shall be constructed in contact with each other except on brick veneer structures and where plywood sheathing is required and properly flashed. Siding shall not be installed between the structure and the deck band. If attached to a brick structure, neither the flashing nor a treated house band for brick structure is required. In addition, the treated deck band shall be constructed in contact with the brick veneer. **Flashing shall be installed per Figure AM103(BELOW)**.

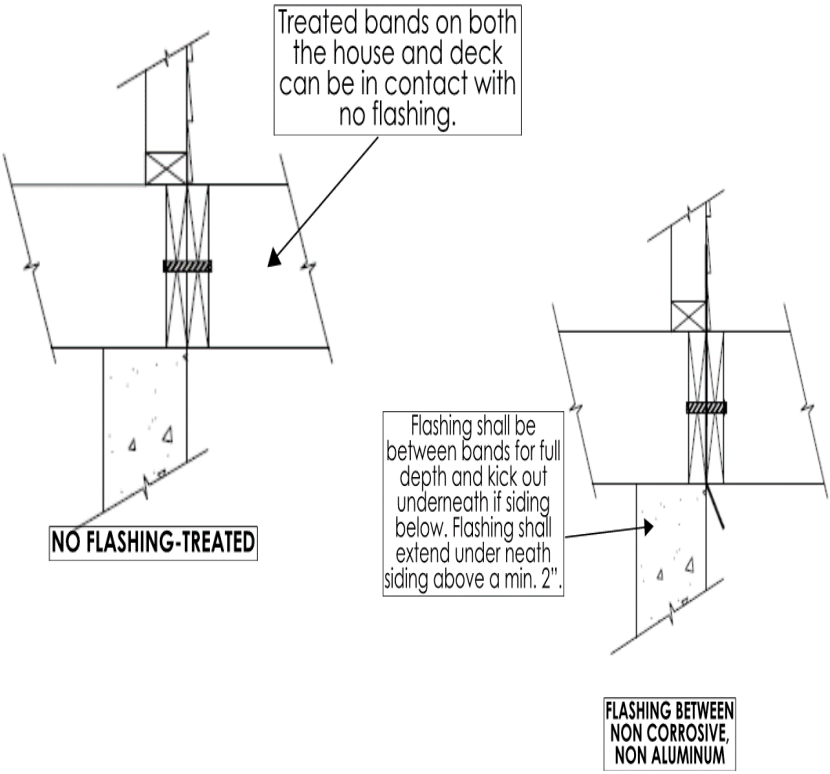

DECK ATTACHMENT

AM104.1 When the deck is supported at the structure by attaching the deck to the structure, the following attachment schedules shall apply for attaching the deck band to the structure.

AM 104.1.1 All Structures Except Brick Veneer			
Method	**Fasteners**	**8′ Max Joist Span** [a]	**16′ Max Joist Span** [a]
1	5/8″ Hot Dipped Galv. Bolts with nut and washer [b] **and** 12d Common Hot Dipped Galv. Nails [c]	1 @ 3′-6″ O.C. **and** 2 @ 8″ O.C.	1 @ 1′-8″ O.C. **and** 3 @ 6″ O.C.
OR			
2	Self-Drilling Screw Fastener [d]	12″ O.C. staggered	6″ O.C. staggered
AM 104.1.2 Brick Veneer Structures			
5/8″ Hot Dipped Galv. Bolts with Nut and Washer [b]		1@ 2′-4″ O.C.	1@ 1′-4″ O.C.

a. Attachment interpolation between 8 foot & 16 foot joists span are allowed,
b. Minimum edge distance for bolts is 2-1/2 inches,
c. Nails must penetrate supporting structure band a minimum of 1-1/2 inches
d. Self-drilling fastener shall be an approved screw having a minimum shank diameter of 0.195″ and a length long enough to penetrate through the supporting structure band. The structure band shall have a minimum depth of 1-1/8″. Screw shall have an evaluated allowable shear load for Southern Pine to Southern Pine lumber of 250 pounds and shall have a corrosion resistant finish equivalent to hot dipped galvanized. Minimum edge distance for screws is 1-7/16″. A minimum of 1/2″ thick wood structural panel if permitted to be located between the deck and the structural band.

MASONRY LEDGE SUPPORT

AM104.1.3 If the deck band Is supported by a minimum of 1/2-inch masonry ledge along the foundation wall, 5/8 inch hot dipped galvanized bolts with washers spaced at 48 inches o.c. may be used for support.

OTHER MEANS OF SUPPORT

AM104.1.4 Joist hangers or other means of attachment may be connected to the house band and shall be properly flashed.

GIRDER SUPPORT AND SPANS

AM105.1 Girders shall bear directly on support post with post attached at top to prevent lateral displacement or be connected to the sides of the post with two 5/8 inch hot dipped galvanized bolts with nut and washer. Girder support may be installed per Figure AM105 for top mount; Figure AM105.1 for side mount and Figure AM105.2 for split girder detail. **Pages 93-94**.

Girders may also be cantilevered off ends of support post no more than 1 joist spacing or 16 inches, whichever is greater per Figure AM105.3.

JOIST SPANS AND CANTILEVERS

AM106.1 Joist spans shall be based upon Table R502.3.1(2) (**ON PAGE 61 OF THIS BOOKLET**) with **40lbs per sq ft live load and 10 lbs per sq ft dead load**. **Floor Joists Supporting Light-Frame Exterior Bearing Wall and Roof for exterior decks** may be cantilevered per Table R502.3.3 (1) (**ON PAGE 62 OF THIS BOOKLET**) NOTE: This Table is based on the use of **#1 and better SYP Lumber**, #2 Grade Douglas fir-larch, Hem fir and Spruce- pine-fir under the Ground Snow Load of ≤20 psf. **There are no provisions in the NCRC that allows the use of #2 SYP for cantilever design.**

CAUTION: The current methods of chemically preserving lumber are much more corrosive to hardware and fasteners than those used in the past. The use of APPROVED corrosion resistant hardware, structural connectors and fasteners is required. (Example; ACQ treated lumber would require the use of ACQ approved or triple galvanized hardware.)

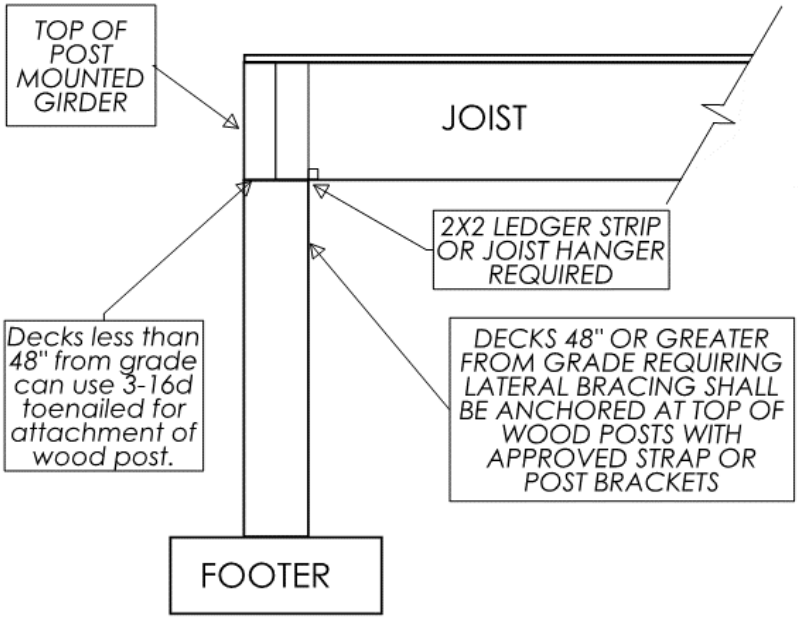

FIGURE AM 105

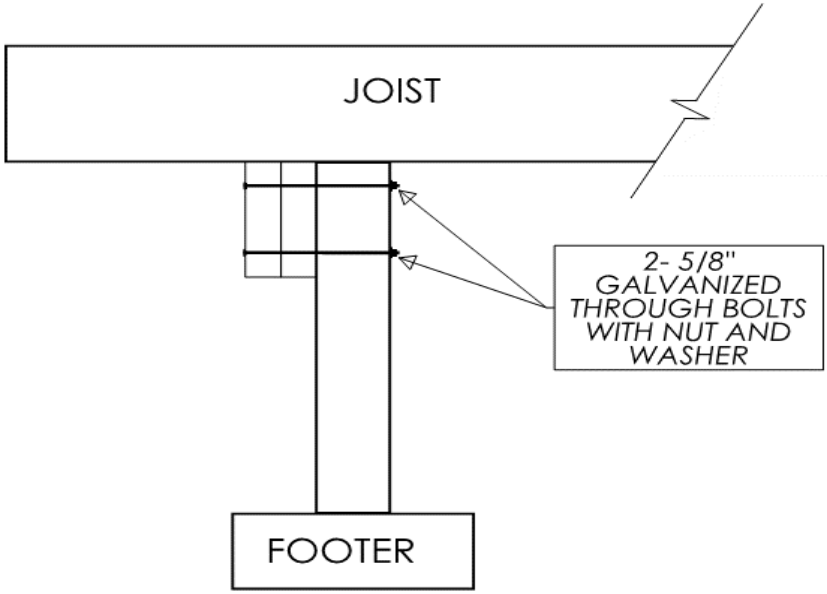

FIGURE AM 105.1

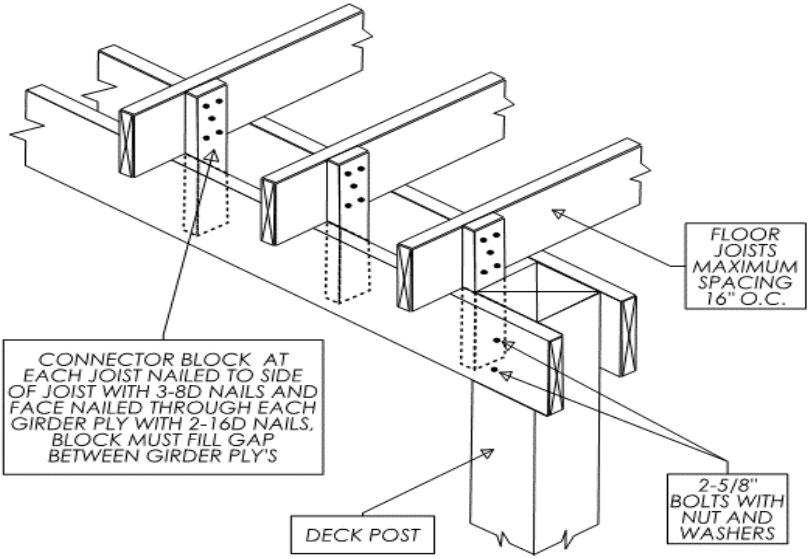

FIGURE 105.2

AM108.1

Maximum Height of Deck Support Posts are as follows:

POST SIZE [a]	MAXIMUM POST HEIGHT [b, c]
4 x4	8' - 0"
6 x6	20' - 0'
•••	Over 20' - 0'

a. This table is based on No. 2 treated Southern Pine posts.

b. From top of footing to bottom of girder.

c. Decks with post heights exceeding these requirements shall be designed by a registered design professional.

Maximum tributary Area is based on 128 total square feet which may be located at different levels.

NOTES:_____

DECK BRACING SECTION

AM109.1 Decks shall be braced to provide lateral stability. The following are acceptable means to provide lateral stability:

AM109.1.1 When the deck floor height is less than 4'-0" above finished grade per Figure AM109 and the deck is attached to the structure in accordance with Section AM104, lateral bracing is not required.

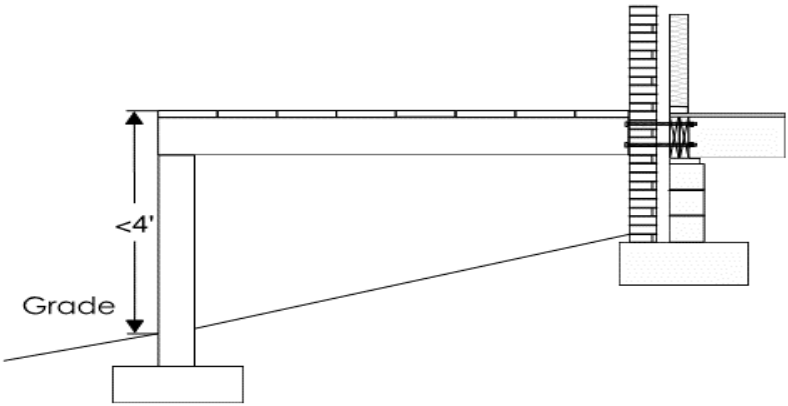

Less than 4' (decking to grade) and attached to structure no bracing required

AM109.1.2 4x4 wood knee braces may be provided on each column in both directions. The knee braces shall attach to each post at a point not less than 1/3 of the post length from the top of the post, and the braces shall be angled between 45 degrees and 60 degrees from the horizontal. Knee braces shall be bolted to the post and the girder/double band with one 5/8-inch hot dipped galvanized bolt with nut and washer at both ends of the brace per Figure AM109.1 ▼

NOTES:_____

_____

_____

_____

_____

_____

_____

_____

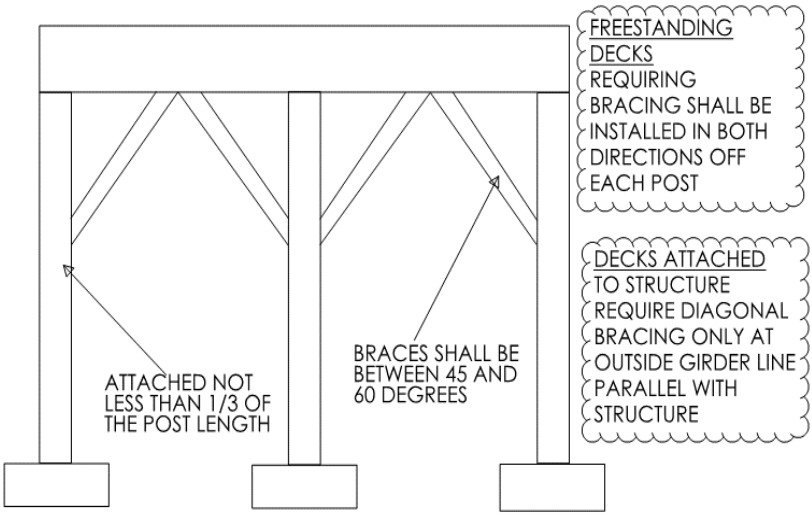

FIGURE AM109.1

AM109.1.3 For free standing decks without knee braces or diagonal bracing, lateral stability may be provided by embedding the post in accordance with Figure AM109.2 and the following: ▼

POST SIZE	MAXIMUM TRIBUTARY AREA	MAXIMUM POST HEIGHT	EMBEDMEN T DEPTH	CONCRETE DIAMETER
4 x 4	48 SF	4' - 0'	2′- 6″	1' - 0″
6 x 6	120 SF	6' - 0"	3' - 6″	1' - 8″

NOTES:_____

_____

_____

_____

_____

_____

_____

_____

_____

_____

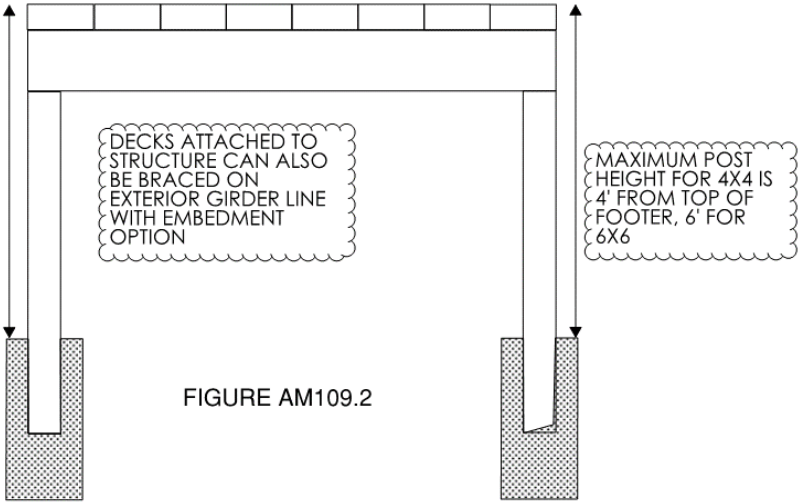

FIGURE AM109.2

<u>AM109.1.4</u> 2 x 6 diagonal vertical cross bracing may be provided in two perpendicular directions for freestanding decks or parallel to the structure at the exterior column line for attached decks. The 2 x 6's shall be attached to the posts with one 5/8-inch hot dipped galvanized bolt with nut and washer at each end of each bracing member **PER FIGURE AM109.3 ▼**

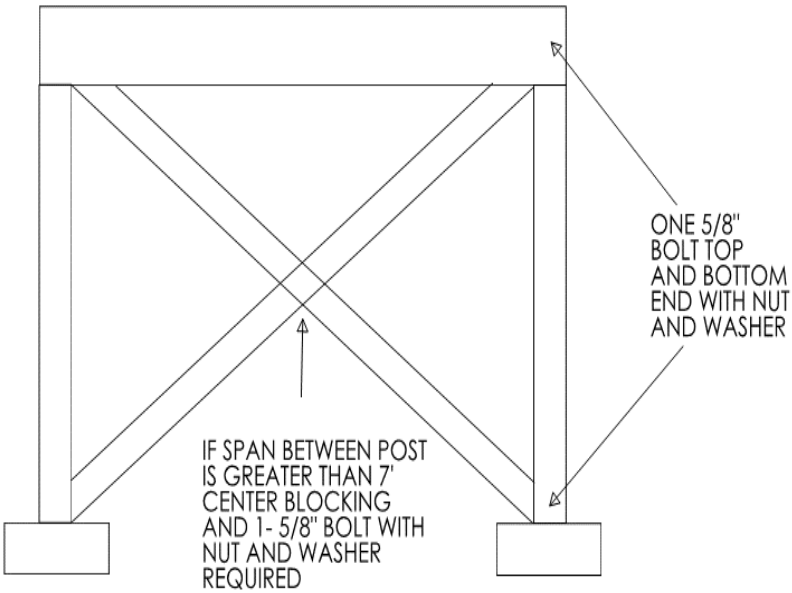

FIGURE AM109.3

FLOOR DECKING

AM107.1 A Floor decking shall be No. 2 grade treated Southern Pine or equivalent. The minimum floor decking thickness shall be as follows:

JOIST SPACING	DECKING (NOMINAL)
12" – O.C.	1" S4S
16" - O.C.	1' T & G
24" - O.C.	1 1/4" S4S
32 " – O.C.	2" S4S

STAIRS

AM110 STAIRS SHALL BE CONSTRUCTED PER FIGURE BELOW.

STRINGER SPANS SHALL BE NO GREATER THAN 7 FOOT SPAN BETWEEN SUPPORTS. SPACING BETWEEN STRINGERS SHALL BE BASED UPON DECKING MATERIAL USED PER FLOOR DECKING MATERIAL USED **PER AM107.1 ABOVE**. EACH STRINGER SHALL HAVE A MINIMUM 3 1/2 INCHES BETWEEN STEP CUT AND THE BACK OF THE STRINGER. IF USED, SUSPENDED HEADERS SHALL BE ATTACHED WITH 3/8 INCH GALVANIZED BOLTS WITH NUTS AND WASHERS TO SECURELY SUPPORT STRINGERS AT THE TOP. ▼

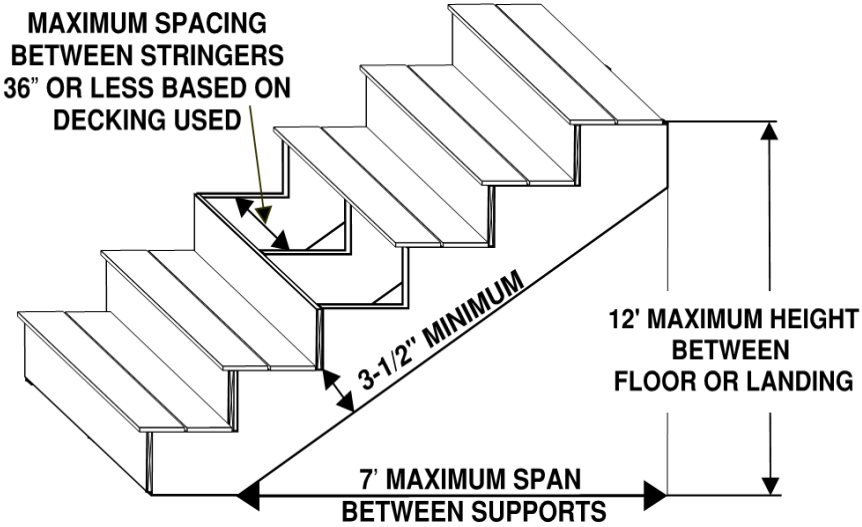

HANDRAILS, GUARDS AND GENERAL

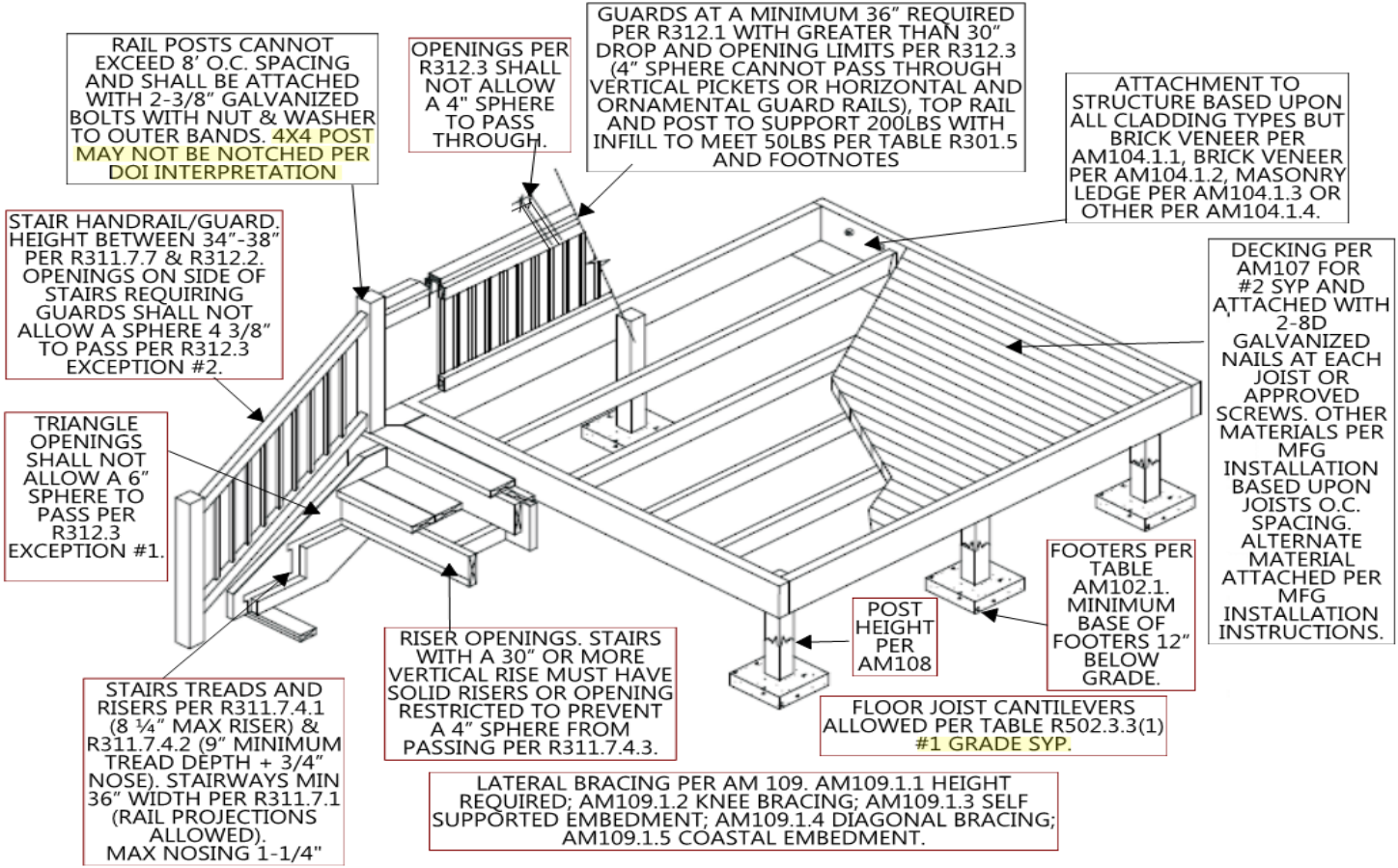
RAIL POSTS CANNOT EXCEED 8' O.C. SPACING AND SHALL BE ATTACHED WITH 2-3/8" GALVANIZED BOLTS WITH NUT & WASHER TO OUTER BANDS. 4X4 POST MAY NOT BE NOTCHED PER DOI INTERPRETATION
OPENINGS PER R312.3 SHALL NOT ALLOW A 4" SPHERE TO PASS THROUGH.
GUARDS AT A MINIMUM 36" REQUIRED PER R312.1 WITH GREATER THAN 30" DROP AND OPENING LIMITS PER R312.3 (4" SPHERE CANNOT PASS THROUGH VERTICAL PICKETS OR HORIZONTAL AND ORNAMENTAL GUARD RAILS), TOP RAIL AND POST TO SUPPORT 200LBS WITH INFILL TO MEET 50LBS PER TABLE R301.5 AND FOOTNOTES
ATTACHMENT TO STRUCTURE BASED UPON ALL CLADDING TYPES BUT BRICK VENEER PER AM104.1.1, BRICK VENEER PER AM104.1.2, MASONRY LEDGE PER AM104.1.3 OR OTHER PER AM104.1.4.
STAIR HANDRAIL/GUARD. HEIGHT BETWEEN 34"-38" PER R311.7.7 & R312.2. OPENINGS ON SIDE OF STAIRS REQUIRING GUARDS SHALL NOT ALLOW A SPHERE 4 3/8" TO PASS PER R312.3 EXCEPTION #2.
DECKING PER AM107 FOR #2 SYP AND ATTACHED WITH 2-8D GALVANIZED NAILS AT EACH JOIST OR APPROVED SCREWS. OTHER MATERIALS PER MFG INSTALLATION BASED UPON JOISTS O.C. SPACING. ALTERNATE MATERIAL ATTACHED PER MFG INSTALLATION INSTRUCTIONS.
TRIANGLE OPENINGS SHALL NOT ALLOW A 6" SPHERE TO PASS PER R312.3 EXCEPTION #1.
FOOTERS PER TABLE AM102.1. MINIMUM BASE OF FOOTERS 12" BELOW GRADE.
POST HEIGHT PER AM108
RISER OPENINGS. STAIRS WITH A 30" OR MORE VERTICAL RISE MUST HAVE SOLID RISERS OR OPENING RESTRICTED TO PREVENT A 4" SPHERE FROM PASSING PER R311.7.4.3.
STAIRS TREADS AND RISERS PER R311.7.4.1 (8 ¼" MAX RISER) & R311.7.4.2 (9" MINIMUM TREAD DEPTH + 3/4" NOSE). STAIRWAYS MIN 36" WIDTH PER R311.7.1 (RAIL PROJECTIONS ALLOWED). MAX NOSING 1-1/4"
FLOOR JOIST CANTILEVERS ALLOWED PER TABLE R502.3.3(1) #1 GRADE SYP.
LATERAL BRACING PER AM 109. AM109.1.1 HEIGHT REQUIRED; AM109.1.2 KNEE BRACING; AM109.1.3 SELF SUPPORTED EMBEDMENT; AM109.1.4 DIAGONAL BRACING; AM109.1.5 COASTAL EMBEDMENT.

SWIMMING POOLS, SPAS & HOT TUBS

1. **What are the requirements for swimming pool, spa and hot tub barriers or fences?**

A. Appendix G Section 105 An outdoor swimming pool, including an in-ground, above-ground or on-ground pool, hot tub or spa shall be surrounded by a barrier which shall comply with the following:

1. The top of the barrier shall be at least 48 inches (1219mm) above grade measured on the side of the barrier which faces away from the swimming pool. Where the top of the pool structure is above grade, such as an above-ground pool, the barrier may be at ground level, such as the pool structure, or mounted on top of the pool structure. The maximum vertical clearance between grade and the bottom of the barrier shall be 2 inches (51 mm) measured on the side of the barrier which faces away from the swimming pool. Where the barrier is mounted on top of the pool structure, the maximum vertical clearance between the top of the pool structure and the bottom of the barrier shall be 4 inches (102 mm).
2. Openings in the barrier shall not allow passage of a 4-inch-diameter (102 mm) sphere.
3. Solid barriers which do not have openings, such as a masonry or stone wall, shall not contain indentations or protrusions except for normal construction tolerances and tooled masonry joints.
4. Where the barrier is composed of horizontal and vertical members and the distance between the tops of the horizontal members is less than 45 inches (1143 mm), the horizontal members shall be located on the swimming pool side of the fence. Spacing between vertical members shall not exceed 1-3/4 inches (44 mm) in width.
5. Where the barrier is composed of horizontal and vertical members and the distance between the tops of the horizontal members is 45 inches (1143 mm) or more, spacing between vertical members shall not exceed 4 inches (102mm). Where there are decorative cutouts

within vertical members, spacing within the cutouts shall not exceed 1-3/4 inches (44 mm) in width.

6. Maximum mesh size for chain link fences shall be a 2-1/4-inch (57 mm) square unless the fence has slats fastened at the top or the bottom which reduce the openings to not more than 1-3/4 inches (44 mm).
7. Where the barrier is composed of diagonal members, such as a lattice fence, the maximum opening formed by the diagonal members shall not be more than 1-3/4 inches (44 mm).
8. Access gates shall comply with the requirements of Section AG105.2, Items 1 through 7, and shall be equipped to accommodate a locking device. Pedestrian access gates shall open outward away from the pool and shall be self-closing and have a self-latching device. Gates other than pedestrian access gates shall have a self-latching device. Where the release mechanism of the self-latching device is located less than 54 inches (1372 mm) from the bottom of the gate, the release mechanism and openings shall comply with the following:

   8.1. The release mechanism shall be located on the pool side of the gate at least 3 inches (76mm) below the top of the gate; **AND**

   8.2. The gate and barrier shall have no opening larger than 1/2 inch (12.7 mm) within 18 inches (457mm) of the release mechanism.
9. Where a wall of a dwelling serves as part of the barrier, **ONE** of the following conditions shall be met:

9.1. The pool shall be equipped with a powered safety cover in compliance with ASTM F 1346; **OR**

9.2. Doors with direct access to the pool through that wall shall be equipped with an alarm which produces an audible warning when the door and/or its screen, if present, are opened. The alarm shall be listed and labeled in accordance with **UL 2017**. The deactivation switch(es) shall be located at least 54 inches (1372 mm) above the threshold of the door; **OR**

9.3. Other means of protection, such as self-closing doors with self-latching devices, which are approved by the governing body, shall be acceptable as long as the degree of protection afforded is not less than the protection afforded by Item 9.1 or 9.2 described above.

2. What are the requirements for above ground swimming pools?

Where an above-ground pool structure is used as a barrier or where the barrier is mounted on top of the pool structure, and the means of access is a ladder or steps:

A. The ladder or steps shall be capable of being secured, locked or removed to prevent access; **OR**

B. The ladder or steps shall be surrounded by a barrier which meets the requirements of Section AG105.2, Items 1 through 9. When the ladder or steps are secured, locked or removed, any opening created shall not allow the passage of a 4-inch-diameter (102 mm) sphere.

3. What are the requirements for spas and hot tubs?

Spas or hot tubs with a safety cover which complies with ASTM F 1346, as listed in **Section AG107**, shall be exempt from the provisions of this appendix.

4. What are the requirements for entrapment protection for swimming pool and spa suction outlets?

AG106.1 Suction outlets shall be designed and installed in accordance with **ANSI/APSP-7.**

NOTES:_____

_____

_____

_____

_____

_____

_____

MINIMUM FENCE REQUIREMENTS

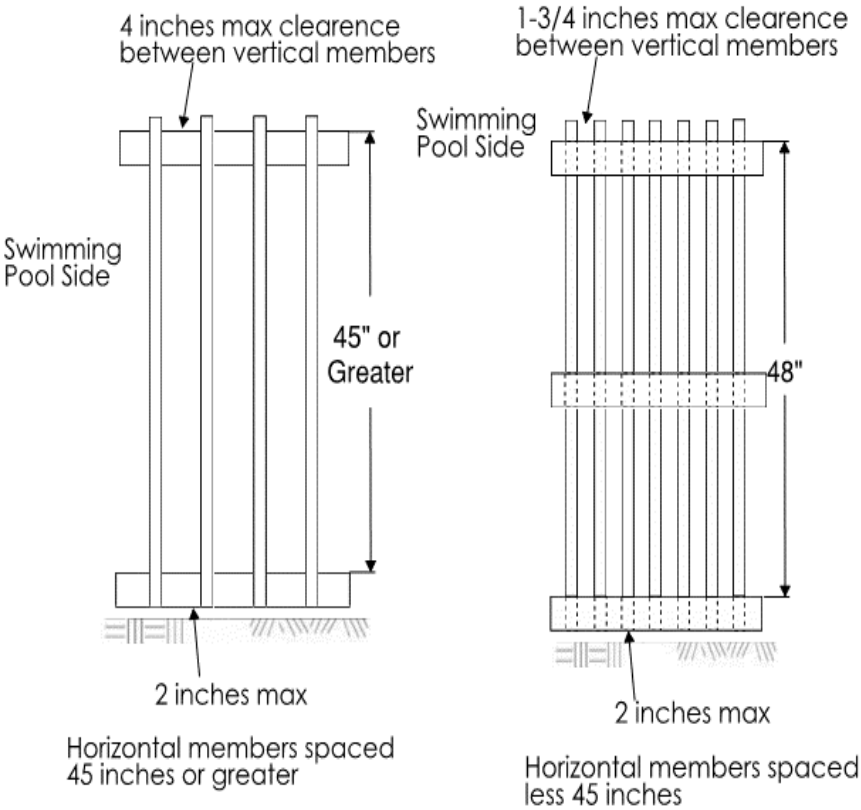

PRIVATE SWIMMING POOL BARRIER CONSTRUCTION

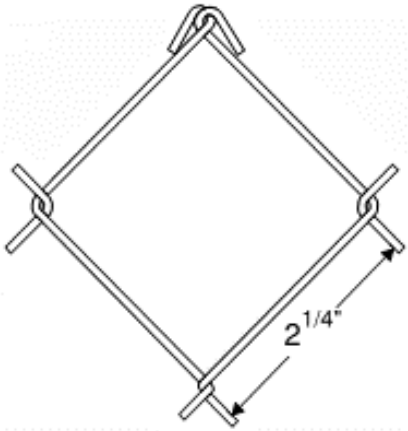

CHAIN-LINK FENCE MESH FOR PRIVATE SWIMMING POOLS

Residential Sales Center Requirements

1. Needs to meet the Accessibly Code A117.1.
2. Need to check that heated space is correct if using garage as sales office. Do not need to stripe if parking space in driveway.
3. Permit requirements (2 ways to permit):
   - **A.** Structure can be permitted all at one time at initial permit stage to show total heated square footage of house and garage area (no garage indicated on application form).
   - **B.** If structure is permitted as having a garage, then a second permit will be required to change that garage area to a sales center (Supplemental permit). This would mean that there would be 2 frame, 2 insulation and 2 final inspections on this site. Inspection request on both permits would need to be scheduled by the contractor.
4. If the garage area is converted back from sales center to a garage, then a new permit is required for that conversion to check structure and verify removal of HVAC registers. Conversion permit back to garage will be the responsibility of the owner (either the builder at that time or the home owner if sold and converted).

Other Requirements:

1. Parking on the site where the Sales Center is located.

Van Accessible access parking space with signage (8' parking, 8' access aisle) per section 4.4.1 **ANSI A117.1**. Space and access isle should be paved and must be marked per section 4.2.3 **ANSI A117.1** .

Access route 4' wide, ramps and any handrails if needed per Chapter 5 of Accessibility Code Entrance door and all interior doors inside the sales office area must be 3/0 with lever handles and entrance door must have low profile threshold, door requirements listed in Chapter 7 of NC Accessibility Code.

One (1) accessible bathroom facility either inside the office space or home with accessible route or an accessible porta-jon can be provided for the duration of the sales center usage. Location of the porta-jon and its access should be discussed with inspector.

If you have other concerns, you can refer to the NCDOI web site. The following is a link to Model Home Access Questions from NCDOI. http://www.ncdoi.com/OSFM/Engineering_and_Codes/Documents/Accessibility/020808.pdf

Any concerns about meeting these requirements at a specific jobsite should be discussed with an area field inspector prior to installation.

*****Residential Sales Center Requirements from Mecklenburg County Consistency Meeting 05/06/2015.**

NOTES:_____

PLAN REVIEW FOR CHILD CARE IN A RESIDENCE

(MAXIMUM 12 FULL TIME CHILDREN, PRIMARY CARE GIVER MUST LIVE IN RESIDENCE)

PURPOSE: To ensure child care facilities in a residence meet:

1. N.C. State Building Code.

2. N.C. State Fire Code and local Ordinances

3. N.C. Dept. of Environment and Natural Resources, Division of Environmental Health Regulations enforced by Mecklenburg County Health Dept.

4. N.C. Dept. of Health and Human Services, Division of Health Service Regulation (DHSR formerly DFS) and the Division of Child Development Regulations.

***PHONE NUMBERS FOR THESE AGENCYS ARE ON PAGE 106.

Please follow these simple guidelines outlined below to get you started. Full Plan Review Requirements will follow.

1. Zoning: It is critical to know what your zoning category is before opening any type of business. To determine zoning requirements and status in Mecklenburg County call 311 or if outside of our area call 704-336-7600. For the Surrounding towns, Cornelius, Davidson, Huntersville, Matthews, Mint Hill, and Pineville please call their office directly.

2. For Adult Day Cares, contact the Department of Health and Human Services, Division of Aging and Adult Services at 919-855-3400. For Child Care Facilities contact Michele, NC Division of Child Development at 704-594-0151. Michele.Sullivan@dhhs.nc.gov Applicants will need a confirmation letter from Licensing stating proposed age and number of kids or adults being served to pre-qualify for the respective facility and license. A copy of this letter must accompany the building permit application at submittal.

3. Applicants should contact Residential Plan Review services at 980-314-CODE (2633) to schedule a preliminary appointment to discuss the North Carolina Building Code requirements and other guidelines set forth by the Department of Health and Human Services or other licensing entity.

At the time of meeting, documentation will be required to validate you have approval from the County Zoning Department and have been pre-qualified from the Department

of Health and Human Services (Adult) to help facilitate your code compliance process.

ADDITIONAL INFORMATION:

1. Please research the North Carolina General Statutes concerning Adult and Child Day Cares, NC GS 131D-6(b) and NC GS 110 respectively.

2. PLAN SUBMITTAL REQUIREMENTS (Know beforehand the service/license applied for.):

3. Complete Plans consisting of 2 pages drawn to scale, minimum size 11″ x 17″ are to be submitted electronically (PDF) via the contractors account at www.meckpermit.com along with permitting, zoning plot plan documents, Health Department Application and NC State Licensing Letter.

A. PAGE 1 of set will be a SITE plan showing:

- **1.** Property lines of lot.
- **2.** Home location on lot.
- **3.** Porches, decks, ramps.
- **4.** Exit doors
- **5.** Driveways, sidewalks.
- **6.** Complete property address, owner name and contact information.

B. PAGE 2 of the set shall a legible floor plan drawn to scale indicating:

1. Room location/name (Day care area, bedroom, bath, kitchen, etc.) and area sq. ft. tabulation.

2. Identify rooms where children will be kept. (children can only be on same floor level as the exit.)

3. Two remote exits are required directly to the exterior, one with 36-inch side hinged door and Accessibility Standard landing and ramp. Secondary exit minimum 32″ clear opening. (Exception: One 36-inch-wide side hinged door providing direct egress to outdoors with above landing/ramp is allowed providing daycare area is confined to the one area of exit. Day Care occupancy limited to ten.). (NCBC 426 ADULT AND CHILD DAY CARE, SECTION 1001.1 ADMINISTRATION-General and 1015 EXIT AND EXIT ACCESS DOORWAYS.)

4. Door Hardware: Lever handles are required; double cylinder deadbolt latches are prohibited. (NCBC 1008.1.9 Door operations & NCRC R311.2 Egress door) (All doors.).
5. Detailed layout of Kitchen showing location of cabinets, 2 compartment kitchen sink and proposed location of separate hand washing sink. (must be approved by Health Department before installation) Appliance location. (Label appliances: Ref., Range, Dishwasher, etc.)
6. Detailed layout of Bathroom showing location of sinks, toilet, tubs, showers, cabinets, etc.
7. Show location of Fire Extinguisher and 1 manual pull Fire Alarm. (call Fire Department for Specific Requirements)
8. Wall and ceiling coverings are to be of non-combustible materials (plaster or gypsum wallboard) (NCBC 426.1.3 Walls and ceilings - Adult and Child Day Care).
9. Smoke alarms in the residence **ARE REQUIRED** to be updated, interconnected and hardwired if the home has an accessible attic/crawlspace that would allow this without removal of interior finishes. (NCRC 2012 R314 Smoke Alarms)
10. Fire Extinguishers: At least one 2-A:10-BC shall be provided per floor with a maximum of 40 feet travel distance to the extinguisher.
11. Adult Day Care: Check with the State Adult Day Care consultants as State requirements exceed the minimum Code requirements set forth in the NC Building & North Carolina Residential Codes.

THE PROCESS:

1.Verify City/County Zoning requirements can be met and acquire Zoning Letter of Intent.

2.Provide verification from the Division of Health Service Regulation (DHSR formerly DFS) or State Child Care consultant stating the type of license that is being applied for. Verification is required to have the following information: Address, Type of Licensing applying for, any limitations to include number of children and age group of the children.

3. Provide complete plans and the Mecklenburg County Health Department. application for in-home day care, submitted electronically with permit and zoning application, minimum plan size 11" X 17". A $300 (non-refundable) Plan Review fee will be charged once plans are accepted for review.

4. The Building permit application shall have all Building and/or other Trades permits listed as required. Once approved, stamped plans will be available online to be printed out and utilized for inspections and are required to be on site at the day care location for Building Inspector, Health Department Official and Childcare Consultant use.

5. Permitting might require placement of an account with a $2,000.00 cash bond or surety bond with Mecklenburg County before permit issuance if the Plan Review and Primary Building permit is submitted under the Day Care name as contractor.

**For projects that involve an addition to a structure or renovations call Residential Plan Review for additional requirements at (980) 314-CODE (2633).

Child Care Regulatory Agencies 10/2016

Mecklenburg County Residential Services
Plan Review Department
700 North Tryon Street
Charlotte, N.C. 28202
Phone: (980) 314-CODE (2633)
Fax: 1-866-851-3553

Mecklenburg County Zoning Department
700 North Tryon Street
Charlotte, N.C. 28202
Phone: 311 or (704) 336-7600
Fax: (704) 353-0196

Mecklenburg County Health Department
700 North Tryon Street
Charlotte, N.C. 28202
Phone: (704) 336-5100
Fax: (704) 336-5306

Mecklenburg County Fire Marshal
(Outside City of Charlotte)
Phone: (980)-314-3070

N.C. Department of Health and Human Services
Division of Child Development & Early Education
Phone: (919) 859-0829
Fax: (919) 715-1012

City of Charlotte Fire Prevention
(Inside City of Charlotte)
Phone: (704) 336-2101
Fax: (704) 336-5190

NOTES: