APPENDIX G

SWIMMING POOLS, SPAS AND HOT TUBS

(The provisions contained in this appendix are not mandatory unless specifically referenced in the adopting ordinance.)

General Comments

Drowning is the second leading cause of accidental death in the home for children under five years of age. It has been the number one cause of accidental deaths in the home for that age group in a number of states, including Arizona, California, Florida and Texas. The use of effective residential swimming pool barriers is the best way to reduce these tragic losses.

This appendix chapter sets forth the regulations for swimming pools, hot tubs and spas. The primary focus of the provisions is the need for an effective barrier surrounding the water area to reduce the potential for young children to gain uncontrolled access.

Section AG101 establishes the scope of the chapter. Section AG102 defines those terms specific to this appendix chapter. Section AG103 identifies specification standards for the design and construction of swimming pools. Section AG104 identifies specification standards for the design and construction of spas and hot tubs. Section AG105 discusses barrier requirements for swimming pools, hot tubs and spas. Section AG106 contains provisions for entrapment protection for suction outlets. Section AG107 indicates the abbreviations for standards-writing organizations, and Section AG108 specifies the various standards used in this appendix chapter.

Purpose

According to the Consumer Product Safety Commission (CPSC), approximately 350 children under 5 years of age drown each year in residential swimming pools, spas and hot tubs. A CPSC study, Child Drowning Study: A Report on the Epidemiology of Drownings in Residential Pools of Children Under Age Five, found that the majority of the victims lived in or were visiting the residence where the accident happened. Less than 2 percent of the drowning incidents occurred when a child trespassed on the property. For these reasons, this appendix chapter states that all swimming pools, spas and hot tubs must be enclosed to prevent young children from gaining unsupervised access to pool areas. This chapter provides prescriptive details for the construction of enclosures around swimming pools, spas and hot tubs to make it more difficult for children, particularly those 5 years old and younger, to enter such areas unsupervised.

SECTION AG101
GENERAL

AG101.1 General. The provisions of this appendix shall control the design and construction of swimming pools, spas and hot tubs installed in or on the *lot* of a one- or two-family dwelling.

❖ This section provides the scope of the appendix chapter on swimming pools, spas and hot tubs. It regulates the design and construction of such facilities where they are located inside a dwelling unit or on the lot of a one- or two-family dwelling.

AG101.2 Pools in flood hazard areas. Pools that are located in flood hazard areas established by Table R301.2(1), including above-ground pools, on-ground pools and in-ground pools that involve placement of fill, shall comply with Sections AG101.2.1 or AG101.2.2.

Exception: Pools located in riverine flood hazard areas which are outside of designated floodways.

❖ Pools, especially above-ground pools and pools that involve fill, can block floodwater and cause waters to rise higher if they are placed in areas with effective flow (effective flow areas are areas that pass the greatest volumes of water, typically with higher velocities). The requirement to consider the impacts of development on flood heights where floodways have not been designated is consistent with the National Flood Insurance Program, *International Residential Code®* (IRC®) Section R324.1.3.2, and the *International Building Code®* (IBC®).

AG101.2.1 Pools located in designated floodways. Where pools are located in designated floodways, documentation shall be submitted to the *building official*, which demonstrates that the construction of the pool will not increase the design flood elevation at any point within the *jurisdiction*.

❖ As with any other construction, the pool could be located in a designated floodway. In this case, an analysis is required to simply show that the design flood elevation in the community is not impacted by the addition of the pool.

AG101.2.2 Pools located where floodways have not been designated. Where pools are located where design flood elevations are specified but floodways have not been designated, the applicant shall provide a floodway analysis that demonstrates that the proposed pool will not increase the design flood eleva-

tion more than 1 foot (305 mm) at any point within the *jurisdiction*.

❖ Similar to the requirements of AG101.2.1, the concern is that the pool not cause an increase of 1 foot (305 mm) to the design flood elevation in the community. In this case, a floodway analysis is required, given that there are no designated floodways. Although FEMA has provided floodways along many rivers and streams shown on a community's Flood Insurance Rate Map (FIRM), many other riverine flood hazard areas have Base Flood Elevations (BFEs) but not designated floodways. In these areas, the potential effects that floodplain construction may have on flood elevations may not have been properly evaluated. In this case, the permit applicant must prepare a hydraulic analysis.

SECTION AG102
DEFINITIONS

AG102.1 General. For the purposes of these requirements, the terms used shall be defined as follows and as set forth in Chapter 2.

❖ This section clarifies the terminology used in this appendix chapter. The terms take on specific meanings, often different from the way they are typically used.

ABOVE-GROUND/ON-GROUND POOL. See "Swimming pool."

❖ These two terms have essentially the same meaning. If a side of a swimming pool projects above the adjacent ground level, the pool is referred to as an above-ground pool. If the bottom of the pool rests on the ground with no portion recessed except for leveling purposes, it is referred to as an on-ground pool. The important factor in both situations is that access to the pool surface is elevated and requires a vertical ascent (from at least one side) to gain access to the water.

A swimming pool situated on the ground or located above the ground is in the same category as other similar facilities such as spas, hot tubs and in-ground pools. All such facilities are simply regulated as swimming pools.

BARRIER. A fence, wall, building wall or combination thereof which completely surrounds the swimming pool and obstructs access to the swimming pool.

❖ Any system of components that encloses a swimming pool to the degree that access is obstructed is a barrier. Enclosure components include the exterior wall of the dwelling unit, a fence and any doors or gates included as a portion of the enclosure. Any construction or natural element that does not surround the pool will allow access at some point. The vast majority of provisions in this appendix chapter relate to the installation of a complying barrier to restrict access to swimming pools, spas and hot tubs. Left unprotected, these facilities present the potential for drownings and near-drownings.

HOT TUB. See "Swimming pool."

❖ Typically regarded as a small soaking tub, a hot tub is defined as a swimming pool and is regulated in the same manner as spas and the various types of swimming pools. Hot tubs often are equipped to introduce bubbles or jets of water into the tub.

IN-GROUND POOL. See "Swimming pool."

❖ An in-ground pool is a swimming pool in which the top of the pool structure is roughly at the same elevation as the adjoining surface surrounding the pool. Unlike an above-ground or on-ground pool, the pool construction itself does not limit access to the pool.

A swimming pool constructed in the ground is in the same category as similar facilities such as spas, hot tubs, above-ground pools and on-ground pools. All such facilities are simply regulated as swimming pools.

RESIDENTIAL. That which is situated on the premises of a detached one- or two-family dwelling or a one-family *townhouse* not more than three stories in height.

❖ Where a pool is located on the property of a single-family dwelling, two-family dwelling, or one-family townhouse, it is "residential." The scope of the provisions in this appendix chapter coincides with this definition.

SPA, NONPORTABLE. See "Swimming pool."

❖ Typically regarded as a whirlpool tub, a spa is defined as a swimming pool and is regulated in the same manner as hot tubs and the various types of swimming pools.

SPA, PORTABLE. A nonpermanent structure intended for recreational bathing, in which all controls, water-heating and water-circulating *equipment* are an integral part of the product.

❖ A nonpermanent structure, a portable spa is self-contained, with all of the controls and equipment integrated.

SWIMMING POOL. Any structure intended for swimming or recreational bathing that contains water over 24 inches (610 mm) deep. This includes in-ground, above-ground and on-ground swimming pools, hot tubs and spas.

❖ To be considered a swimming pool for the provisions of this appendix chapter, the structure used for swimming or recreational bathing must be more than 24 inches (610 mm) deep. Hot tubs, spas, in-ground pools, on-ground pools and above-ground pools are included in this definition if they are the minimum depth prescribed.

SWIMMING POOL, INDOOR. A swimming pool which is totally contained within a structure and surrounded on all four sides by the walls of the enclosing structure.

❖ Where a swimming pool is located in a enclosed structure, fully surrounded by walls, it is an indoor pool. Of critical concern is the easy access afforded to children by an indoor pool.

SWIMMING POOL, OUTDOOR. Any swimming pool which is not an indoor pool.

❖ Where a swimming pool is not fully enclosed, as is required in the definition of an indoor pool, it is an outdoor swimming pool. A pool that may be partially inside and partially outside is defined as an outdoor pool because it is not completely surrounded by a structure.

SECTION AG103
SWIMMING POOLS

AG103.1 In-ground pools. In-ground pools shall be designed and constructed in conformance with ANSI/NSPI-5 as listed in Section AG108.

❖ The requirements of ANSI/NSPI-5 regulating residential in-ground swimming pools are applicable to all in-ground pools regulated by this appendix chapter.

AG103.2 Above-ground and on-ground pools. Above-ground and on-ground pools shall be designed and constructed in conformance with ANSI/NSPI-4 as listed in Section AG108.

❖ The requirements of ANSI/NSPI-4 regulating residential above-ground and on-ground swimming pools are applicable to all such pools regulated by this appendix chapter.

AG103.3 Pools in flood hazard areas. In flood hazard areas established by Table R301.2(1), pools in coastal high hazard areas shall be designed and constructed in conformance with ASCE 24.

❖ The purpose of this section is to address installation of swimming pools in or on the lot of a one- or two-family dwelling if the location of the proposed swimming pool is in a coastal high-hazard area (V Zone). Coastal high-hazard areas are areas where wave heights are predicted to exceed 3 feet (914.4 mm) during the base flood. Breaking waves impart dynamic loads on structures, including above-ground pools and inground pools in soils that are subject to scour and erosion. ASCE 24 specifies that pools are to be designed to withstand flood-related loads and load combinations. If pools are structurally connected to buildings, the pools are to be designed to function as a continuation of the building (see Section R324.3.3). The regulations of the National Flood Insurance Program require that all development be designed and adequately anchored to prevent floatation, collapse, or lateral movement resulting from hydrodynamic and hydrostatic loads, including the effects of buoyancy.

SECTION AG104
SPAS AND HOT TUBS

AG104.1 Permanently installed spas and hot tubs. Permanently installed spas and hot tubs shall be designed and constructed in conformance with ANSI/NSPI-3 as listed in Section AG108.

❖ The requirements of ANSI/NSPI-3 regulating permanently installed residential spas are applicable to all nonportable spas and hot tubs.

AG104.2 Portable spas and hot tubs. Portable spas and hot tubs shall be designed and constructed in conformance with ANSI/NSPI-6 as listed in Section AG108.

❖ The requirements of ANSI/NSPI-6 regulating residential portable spas are applicable to all such spas.

SECTION AG105
BARRIER REQUIREMENTS

AG105.1 Application. The provisions of this chapter shall control the design of barriers for residential swimming pools, spas and hot tubs. These design controls are intended to provide protection against potential drownings and near-drownings by restricting access to swimming pools, spas and hot tubs.

❖ This section describes the provisions for barriers around residential swimming pools, hot tubs and spas. A swimming pool or similar facility creates an attractive temptation to children, including very young children and infants who do not know how to swim. The installation of an effective barrier can help reduce the number of children who die or are injured as the result of open access to a swimming pool, spa or hot tub.

AG105.2 Outdoor swimming pool. An outdoor swimming pool, including an in-ground, above-ground or on-ground pool, hot tub or spa shall be surrounded by a barrier which shall comply with the following:

1. The top of the barrier shall be at least 48 inches (1219 mm) above *grade* measured on the side of the barrier which faces away from the swimming pool. The maximum vertical clearance between grade and the bottom of the barrier shall be 2 inches (51 mm) measured on the side of the barrier which faces away from the swimming pool. Where the top of the pool structure is above grade, such as an above-ground pool, the barrier may be at ground level, such as the pool structure, or mounted on top of the pool structure. Where the barrier is mounted on top of the pool structure, the maximum vertical clearance between the top of the pool structure and the bottom of the barrier shall be 4 inches (102 mm).
2. Openings in the barrier shall not allow passage of a 4-inch-diameter (102 mm) sphere.
3. Solid barriers which do not have openings, such as a masonry or stone wall, shall not contain indentations or protrusions except for normal construction tolerances and tooled masonry joints.
4. Where the barrier is composed of horizontal and vertical members and the distance between the tops of the horizontal members is less than 45 inches (1143 mm), the horizontal members shall be located on the swimming pool side of the fence. Spacing between vertical members shall not exceed $1^3/_4$ inches (44 mm) in width. Where there are decorative cutouts within vertical members, spacing within the cutouts shall not exceed $1^3/_4$ inches (44 mm) in width.
5. Where the barrier is composed of horizontal and vertical members and the distance between the tops of the hori-

zontal members is 45 inches (1143 mm) or more, spacing between vertical members shall not exceed 4 inches (102 mm). Where there are decorative cutouts within vertical members, spacing within the cutouts shall not exceed $1^3/_4$ inches (44 mm) in width.

6. Maximum mesh size for chain link fences shall be a $2^1/_4$-inch (57 mm) square unless the fence has slats fastened at the top or the bottom which reduce the openings to not more than $1^3/_4$ inches (44 mm).
7. Where the barrier is composed of diagonal members, such as a lattice fence, the maximum opening formed by the diagonal members shall not be more than $1^3/_4$ inches (44 mm).
8. Access gates shall comply with the requirements of Section AG105.2, Items 1 through 7, and shall be equipped to accommodate a locking device. Pedestrian access gates shall open outward away from the pool and shall be self-closing and have a self-latching device. Gates other than pedestrian access gates shall have a self-latching device. Where the release mechanism of the self-latching device is located less than 54 inches (1372 mm) from the bottom of the gate, the release mechanism and openings shall comply with the following:
   - 8.1. The release mechanism shall be located on the pool side of the gate at least 3 inches (76 mm) below the top of the gate; and
   - 8.2. The gate and barrier shall have no opening larger than $^1/_2$ inch (12.7 mm) within 18 inches (457 mm) of the release mechanism.
9. Where a wall of a *dwelling* serves as part of the barrier, one of the following conditions shall be met:
   - 9.1. The pool shall be equipped with a powered safety cover in compliance with ASTM F 1346; or
   - 9.2. Doors with direct access to the pool through that wall shall be equipped with an alarm which produces an audible warning when the door and/or its screen, if present, are opened. The alarm shall be listed and *labeled* in accordance with UL 2017. The deactivation switch(es) shall be located at least 54 inches (1372 mm) above the threshold of the door; or
   - 9.3. Other means of protection, such as self-closing doors with self-latching devices, which are *approved* by the governing body, shall be acceptable as long as the degree of protection afforded is not less than the protection afforded by Item 9.1 or 9.2 described above.
10. Where an above-ground pool structure is used as a barrier or where the barrier is mounted on top of the pool structure, and the means of access is a ladder or steps:
    - 10.1. The ladder or steps shall be capable of being secured, locked or removed to prevent access; or
    - 10.2. The ladder or steps shall be surrounded by a barrier which meets the requirements of Section AG105.2, Items 1 through 9. When the ladder or steps are secured, locked or removed, any opening created shall not allow the passage of a 4-inch-diameter (102 mm) sphere.

❖ This section provides prescriptive requirements for the construction of the swimming pool barrier.

1. The barrier height requirement of 48 inches (1219 mm) above the ground is based on reports that document the ability of children under the age of 5 to climb over barriers that are less than 48 inches (1219 mm) in height. The basis for the 4-inch (102 mm) criterion for an opening between the barrier and the top of the pool frame is the same as for guard construction as addressed in Section R312. Refer to Commentary Figure AG105.2(1).

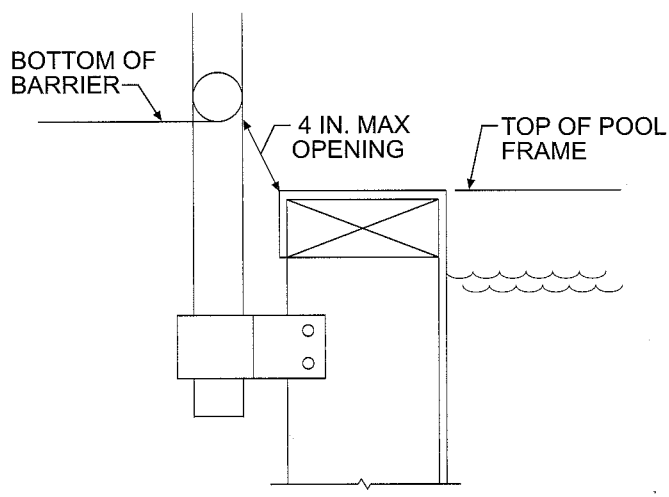

For SI: 1 inch = 25.4 mm.

Figure AG105.2(1)
OPENING LIMITATIONS

2. The general provision is applicable only when one of the conditions addressed in Items 4, 5, 6 and 7 is not present. For example, a chain-link fence would be regulated by the requirements of Item 6, which reduces the general opening criterion of 4 inches (102 mm) to $2^1/_4$ inches (57 mm). The basis for the 4-inch (102 mm) criterion is the same as for guard construction per Section R312. It is based on studies of the body measurements of children 13 to 18 months old.

3. This provision reduces the potential for gaining a foothold and climbing the barrier.

4. The more stringent 1.75-inch (44 mm) provision for spacing between vertical members applies when the spacing between horizontal members is less than 45 inches (1143 mm). It acknowledges the potential for a child to gain both a handhold and a foothold on closely spaced horizontal members and reduces the potential for a child to gain a foothold by limiting the space between the vertical members on the same barrier. If the horizontal members are spaced less than 45 inches (1143 mm) apart, they must also be located on the swimming pool side of the fence as shown in Commentary Figure AG105.2(2) so that they are not available to be used to climb the barriers.

5. This requirement is the counterpart to Item 4 in that it permits the opening in the barrier to be 4 inches (102 mm) if the vertical spacing of the horizontal members equals or exceeds 45 inches (1143 mm) as illustrated in Commentary Figure AG105.2(2). It is consistent with Item 2, which limits openings in the barrier to a 4-inch (102 mm) diameter. The spacing of horizontal members 45 inches (1143 mm) apart precludes them from being used by small children to climb the barrier.

6. The $2^1/_4$-inch (57 mm) dimension is intended to reduce the potential for a child to gain a foothold [see Commentary Figure AG105.2(3)]. The mesh size is permitted to be larger than $2^1/_4$-inches (57 mm) square if slats are used to reduce the mesh opening to $1^3/_4$ inches (44 mm) in order to decrease the potential for a child to obtain a foothold or handhold.

7. A slightly larger opening is permitted for barriers composed of diagonal members other than chain link fences, on the basis that such barriers would be more difficult to gain a foothold and handhold on than a chain link fence. The $1^3/_4$-inch (44 mm) dimension is consistent with Items 4, 5 and 6.

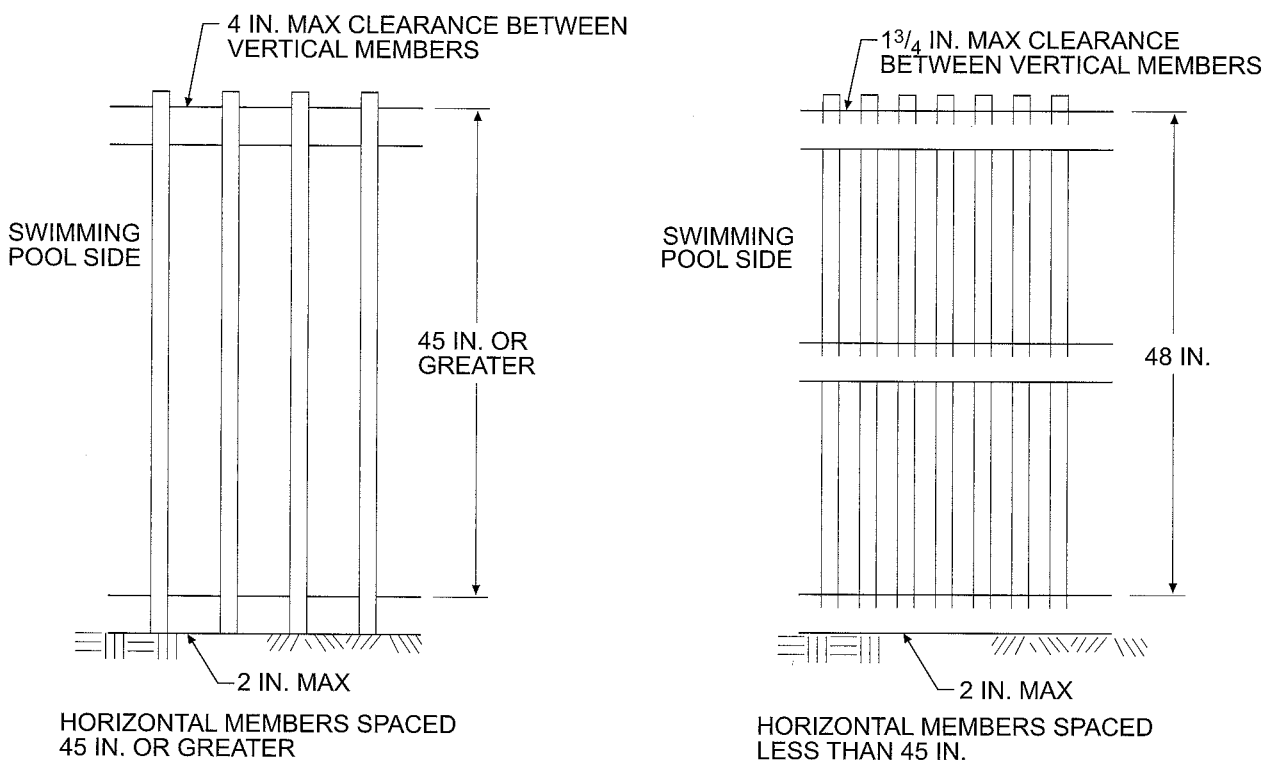

For SI: 1 inch = 25.4 mm.

Figure AG105.2(2)
PRIVATE SWIMMING POOL BARRIER CONSTRUCTION

8. Agate represents the same potential hazard relative to climbing as do the other portions of the barrier; therefore, it must be constructed in accordance with applicable Items 1 through 7. Additionally, because the gate also represents a potential breech of the barrier because the gate can be opened, the code provides prescriptive details for the construction and operation of the gate. A self-closing pedestrian gate must open away from the pool because if the latch fails to operate, a child pushing on the gate will not gain immediate access to the pool. Pushing on the gate may also engage the latch. Large, nonpedestrian gates are not required to be self-closing because of prohibitive cost and maintenance concerns coupled with the fact that these gates are typically operated by persons other than small children. The 54-inch (1372 mm) latch height requirement limits the potential for small children to reach and activate the latch. If the latch is located lower than 54 inches (1372 mm), the code's prescriptive location requirements preclude the latch from being activated by small children who are not on the pool side of the gate.

9. Many residential settings with backyard pools use the dwelling as a portion of the barrier required around the pool, such as where the fence bounding the property terminates at the dwelling. This limits access to the pool by unsupervised children around the perimeter of the fence, but there is still a potential for children to access the pool from within the dwelling. Indeed, almost half the children involved in drowning or near-drowning accidents gained access to the pool from the dwelling.

   The provisions of this section restrict such access by small children and are applicable to all doors in walls that form a portion of the barrier required around swimming pools.

   Protection of such door openings to pool areas can be achieved in any one of the methods described in Items 9.1 through 9.3. The first alternative does not require protection of the exterior door itself but limits access to the pool by means of a power safety cover. The performance criteria specified when this option is selected assures that the power safety cover is an adequate and reliable barrier to the pool. In Item 9.2, the alarm is configured to allow adults who are accessing the house to open the door, enter the house and deactivate the system to prevent a false alarm. The touchpad used to deactivate the system must be mounted 54 inches (1372 mm) above the floor, which is presumed to be beyond the reach of small children.

   Item 9.3 permits doors to pool areas to be protected by devices that render the door self-closing and self-latching. Any other requirements would be performance based because the code requires equivalency only with Item 9.1 or 9.2. One possible criterion could require the release mechanism for the latching device to be located a minimum of 54 inches (1372 mm) above the floor, which is presumed to be beyond the reach of small children. In addition, doors protected by the method specified in Item 9.3 should probably open away from the pool area. This is so that if the door failed to latch, a child outside the pool area pushing against the door would cause it to close and not swing to an open position.

10. The code permits the wall of the pool itself to serve as the barrier to the pool, if the wall extends at least 48 inches (1219 mm) above the finished ground level around the perimeter of the pool. Unless it can be secured, locked or removed, the ladder must be surrounded by a complying barrier to limit access to the ladder.

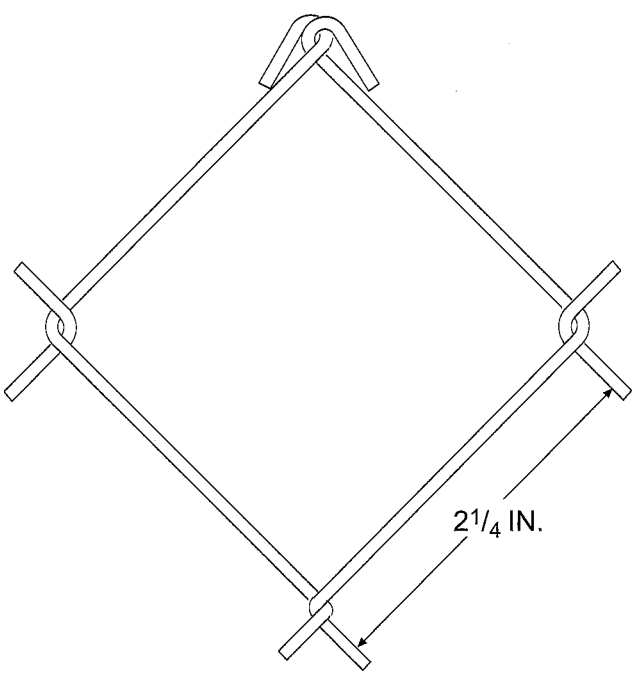

For SI: 1 inch = 25.4 mm.

Figure AG105.2(3)
CHAIN-LINK FENCE MESH
FOR PRIVATE SWIMMING POOLS

AG105.3 Indoor swimming pool. Walls surrounding an indoor swimming pool shall comply with Section AG105.2, Item 9.

❖ Indoor pools represent the same hazards as outdoor pools. For this reason, the walls and doors surrounding an indoor swimming pool are regulated in the same manner as an exterior wall of a dwelling where the wall is used as a barrier for an outdoor pool. The provisions of Section AG105.2, Item 9 apply in their entirety.

AG105.4 Prohibited locations. Barriers shall be located to prohibit permanent structures, *equipment* or similar objects from being used to climb them.

❖ The purpose of a swimming pool barrier would be defeated if children could climb on benches, planters, pumps and similar permanent features adjacent to the barrier and gain access to the pool area. Therefore, the area adjacent to the barrier must be carefully designed and constructed to avoid such a condition. This provision is performance in character and must be reviewed on a case-by-case basis.

AG105.5 Barrier exceptions. Spas or hot tubs with a safety cover which complies with ASTM F 1346, as listed in Section AG107, shall be exempt from the provisions of this appendix.

❖ The provisions of this appendix chapter are not applicable to spas and hot tubs where an approved safety cover serves as the protective barrier. The requirements of ASTM F 1346 contain a number of criteria so that the safety cover can provide a level of protection that is equivalent to that provided by a swimming pool enclosure barrier. The following requirements are representative of several of the specifications found in the standard:

1. There should be a means of fastening the safety cover to the hot tub or spa, such as key locks, combination locks, special tools or similar devices that will prohibit children from removing or operating the cover. The fastening mechanism, design and location are vital components that help prevent a child's entry to the water.
2. The safety cover should have a label that provides a warning and message regarding the risk of drowning. The label is also very important for the transfer of information to second owners and temporary users.
3. The cover should have been tested to demonstrate that it is capable of supporting the weight of one child [50 pounds (23 kg)] and one adult [225 pounds (102 kg)] so an adult and a child can be supported during a rescue operation.
4. There should be no openings in the cover itself or at any point where the cover joins the surface of the hot tub or spa that would allow a child's head to pass through. The 4-inch (102 mm) spacing for guards in Section R312 and openings in pool enclosures of Section AG105.2 is also applicable.
5. Safety covers are to be installed in accordance with the manufacturer's instructions.

SECTION AG106
ENTRAPMENT PROTECTION FOR SWIMMING POOL AND SPA SUCTION OUTLETS

AG106.1 General. Suction outlets shall be designed and installed in accordance with ANSI/APSP-7.

❖ Vacuum devices for suction inlet systems in pool water circulation are a safety hazard. Body entrapment or hair entrapment can cause drowning and evisceration. Therefore it is important that protection be provided against possible entrapment at the pool entrances to suction inlets and that vacuum relief be provided for the vacuum system. The referenced standard, ANSI/APSP-7 provides requirements intended to prevent entrapment.

SECTION AG107
ABBREVIATIONS

AG107.1 General.

ANSI—American National Standards Institute
11 West 42nd Street
New York, NY 10036

APSP—Association of Pool and Spa Professionals
NSPI—National Spa and Pool Institute
2111 Eisenhower Avenue
Alexandria, VA 22314

ASCE—American Society of Civil Engineers
1801 Alexander Bell Drive
Reston, VA 98411-0700

ASTM—ASTM International
100 Barr Harbor Drive,
West Conshohocken, PA 19428

UL—Underwriters Laboratories, Inc.
333 Pfingsten Road
Northbrook, IL 60062-2096

❖ This section sets forth the full names and addresses of organizations that develop standards referenced in this appendix chapter. The abbreviations for the names of the organizations are used throughout the code text.

SECTION AG108
STANDARDS

AG108.1 General.

ANSI/NSPI

ANSI/NSPI-3-99 Standard for Permanently Installed Residential Spas AG104.1

ANSI/NSPI-4-99 Standard for Above-ground/On-ground Residential Swimming Pools AG103.2

ANSI/NSPI-5-2003 Standard for Residential In-ground Swimming Pools. AG103.1

ANSI/NSPI-6-99 Standard for Residential Portable Spas AG104.2

ANSI/APSP

ANSI/APSP-7-06 Standard for Suction Entrapment avoidance in Swimming Pools, Wading Pools, Spas, Hot Tubs and Catch Basins. AG106.1

ASCE

ASCE/SEI-24-05 Flood Resistant Design and Construction AG103.3

ASTM

ASTM F 1346-91 (2003) Performance Specification for Safety Covers and Labeling Requirements for All Covers for Swimming Pools, Spas and Hot Tubs AG105.2, AG105.5

UL

UL 2017-2000 Standard for General-purpose Signaling Devices and Systems—with Revisions through June 2004 . . . . . AG105.2

❖ The seven referenced standards found in this appendix chapter are listed in this section.